THIS DRAWING IS UNPUBLISHED. RELEASED FOR PUBLICATION .19 .
© COPYRIGHT 19 BY AMP INCORPORATED. ALL RIGHTS RESERVED.

LOC	DIST
FT	0

REVISIONS

P	LTR	DESCRIPTION	DATE	DWN	APVD
	M	ADDED -2, EC 0G3B-0009-99	02 SEP 99	–	–
	N	REVISED EC 0G3B-0020-99	07 SEP 99	SW	MC
	P	REVISED EC 0G3B-0067-99	08 SEP 99	SW	MC

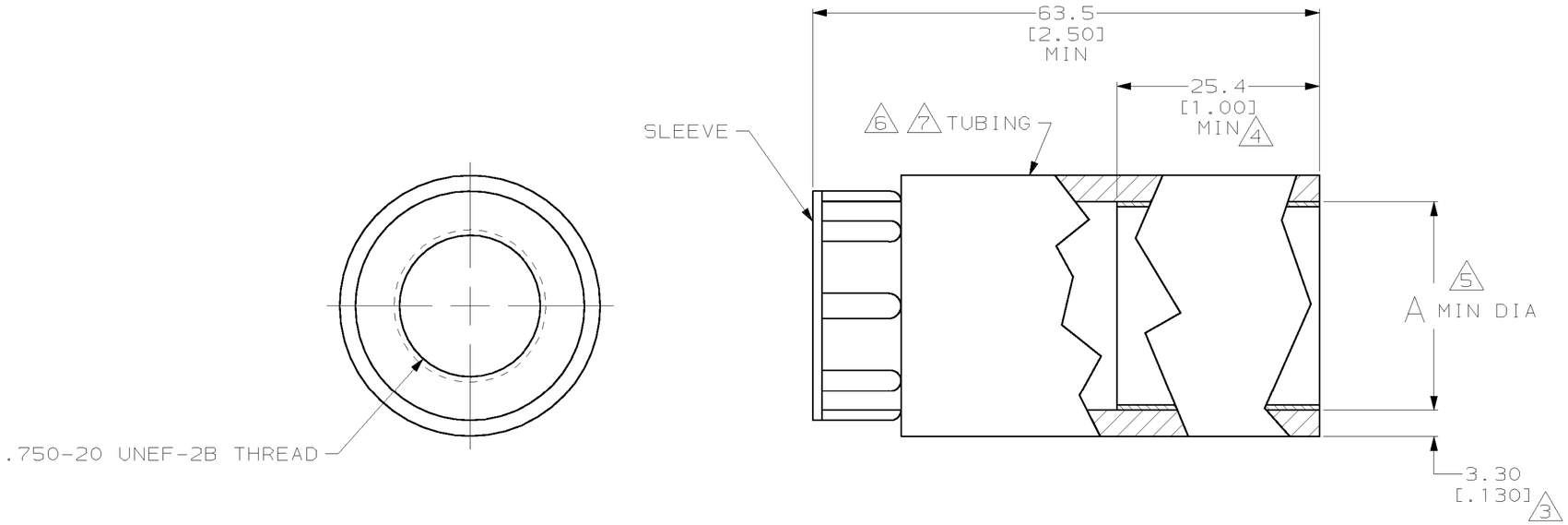

1. POLYOLEFIN, BLACK.
2. NYLON, BLACK.
3. NOMINAL WALL THICKNESS, PRIOR TO HEAT SHRINKING.
4. LENGTH OF SEALANT.
5. EXPANDED INSIDE DIAMETER.
6. ASSEMBLY WILL PASS 0.0703 KG PER SQUARE CENTIMETER [ONE POUND PER SQUARE INCH] WATER PRESSURE TEST.
7. 121°C[250°F] SHRINK TEMPERATURE.
8. -55°C TO 110°C[-67°F TO 230°F] OPERATING TEMPERATURE.

A 5	CABLE DIA RANGE	MAXIMUM RECOVERED INSIDE DIAMETER	PART NUMBER
24.89[.980]	6.35-9.53[.250-.375]	4.95[.195]	54123-2
19.68[.775]	9.53-18.42[.375-.725]	7.62[.300]	54123-1

THIS DRAWING IS A CONTROLLED DOCUMENT.

DIMENSIONS: mm

TOLERANCES UNLESS OTHERWISE SPECIFIED:
0 PLC ±-
1 PLC ±-
2 PLC ±-
3 PLC ±-
4 PLC ±-
ANGLES ±-

MATERIAL – TUBING: 1 SLEEVE: 2
FINISH –

DWN S.WELDON 02 SEP 99
CHK –
APVD –
PRODUCT SPEC –
APPLICATION SPEC –
WEIGHT –

AMP Incorporated
Harrisburg, PA 17105-3608

NAME STRAIN RELIEF ASSY, SHELL, SIZE 13, CPC

SIZE	CAGE CODE	DRAWING NO	RESTRICTED TO
A2	00779	C- 54123	–

CUSTOMER DRAWING | SCALE 2:1 | SHEET 1 OF 1 | REV P

54123

AMP 1471-9 REV 11JUN97

08-SEP-99 08:03:29 amp16297 /home/amp16297/edmmod