PAGE	1 OF 1

REVISION RECORD MODIFICATIONS	DATE	REV.
RELEASE TO PRODUCTION	2010.12.15	A.0

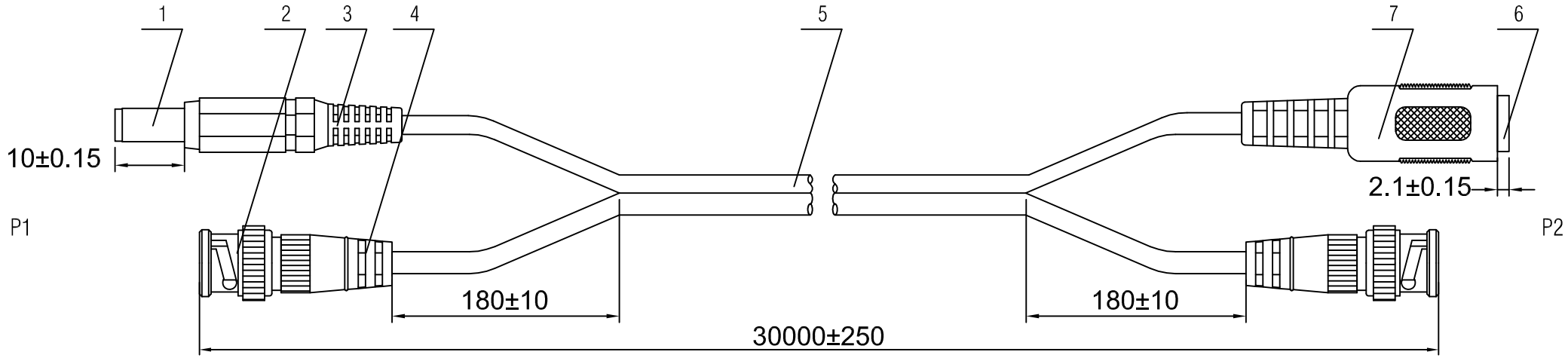

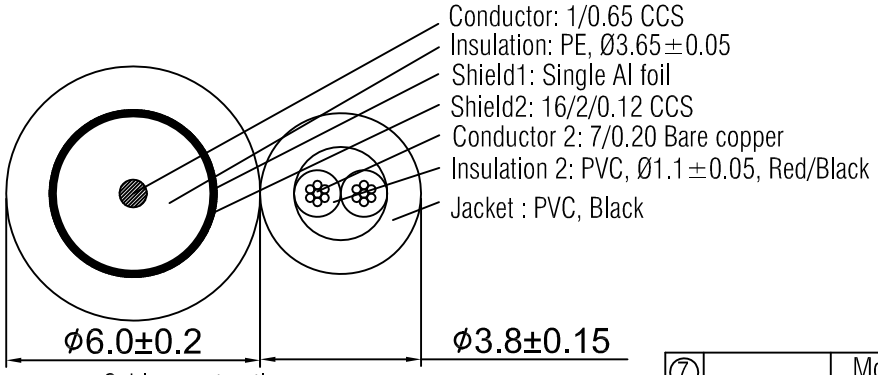

Cable construction

PIN OUT

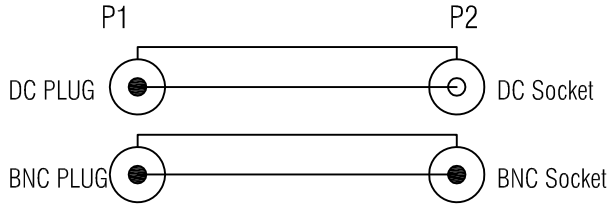

NOTES:
ELECTRICAL PROPERTIES:
1.100% OPEN,SHORT & MIS-WIRE TEST
2.CONTACT RESISTANCE: 5 ohm (MAX)
3.INSULATION RESISTANCE: 2M ohm (MIN) 300VDC/1ms
4.RoHS compliance.

NO.	PARTS NO.	Parts Name	Specification	Q`TY
⑦		Molding	PVC, Black, 45P	1PC
⑥		Connector	DC2.1 Socket, Nickel plated	1PC
⑤		Cable	PVC Cable,OD:6.0*3.8mm	1PC
④		Molding	PVC, Black, 45P	1PC
③		Molding	PVC, Black, 45P	1PC
②		Connector	BNC Plug, Nickel plated	2PCS
①		Connector	DC5.5*2.1 Plug, Nickel plated	1PC

APPROVED	CHECKED	DRAWN	CUSTOMER:	NEDIS
CXD 2010.12.15	CXD 2010.12.15	ZHT 2010.12.15	ITEM NO.	SEC-CABLE1030
			DRAW NO.	CB105-C052
			UNIT	mm
			SCALE	free

DESCRIPTION

BNC/M+ DC(5.5 x 2.1)/M-BNC/M+ DC(5.5 x 2.1)/F

KONIG ELECTRONIC