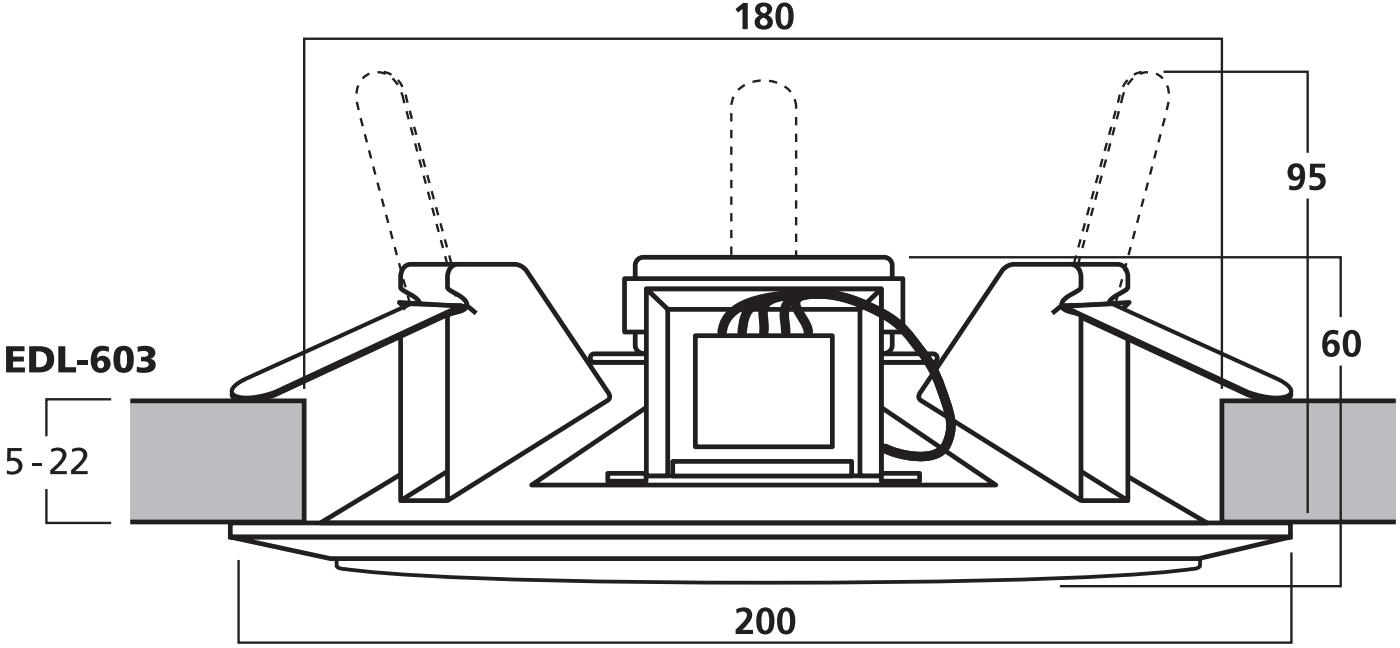
180
95
60
EDL-603
5 - 22
200