TQFP-32 Socket card

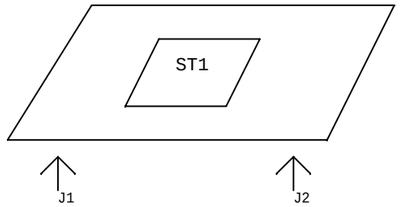

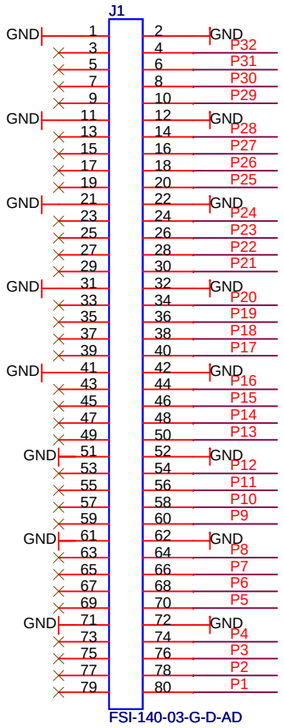

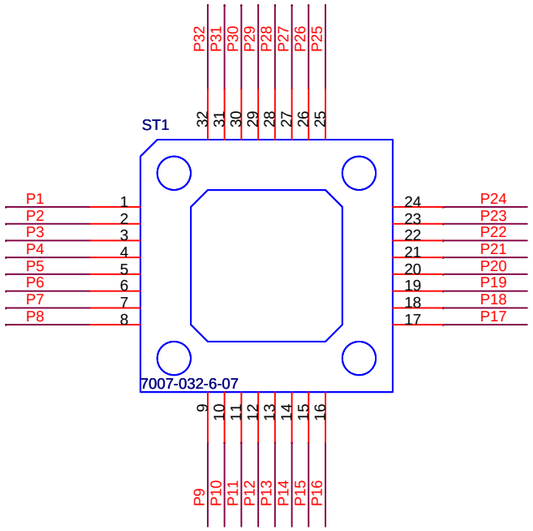

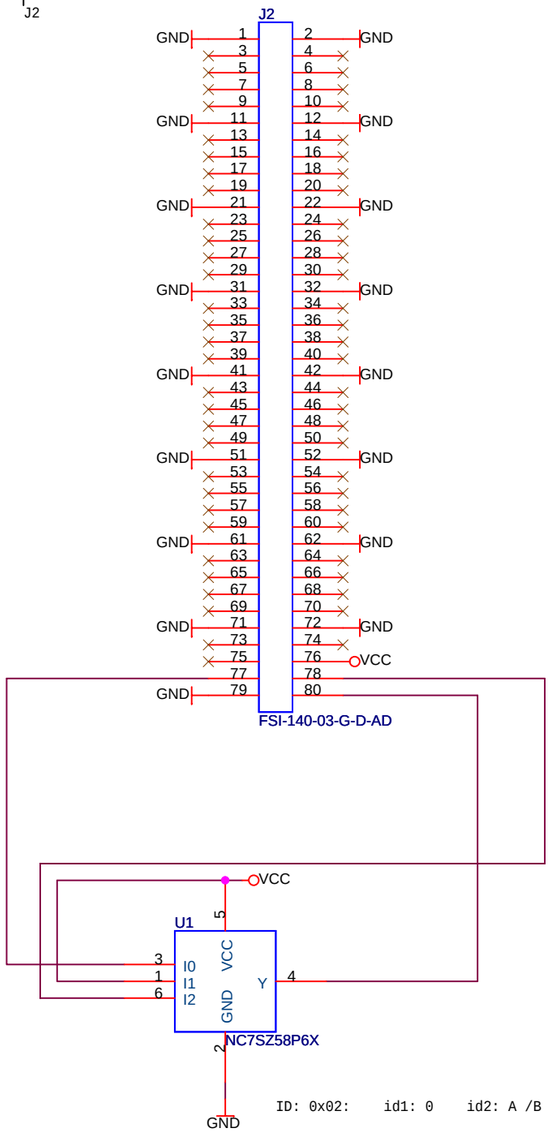

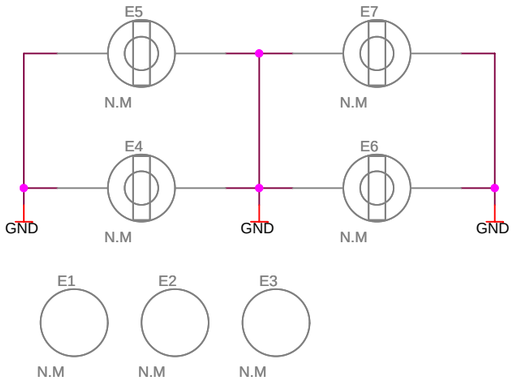

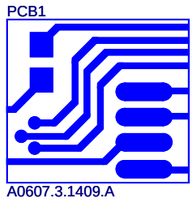

Title	TQFP-32 Socket Card	
Size B	Document Number <Doc>	Rev A
Date: Friday, April 13, 2007	Sheet 1 of 1	