14 in 1 KIT

EDUCATIONAL SOLAR ROBOT

Build your own solar robot kit

Assembly & Instruction

Manual

CONTENTS

Module Assembly

14 in 1 EDUCATIONAL SOLAR ROBOT KIT

Product Introduction

Alternative energy is the future, so now is the perfect time to start children on the path of learning basic concepts behind these technologies. Fortunately, this product is powered by the sun, there are no batteries required. The robot moves in direct sunlight and allows children to create while using their infinite imagination.

There are two levels in building the robot kit. Level one includes: Turtle-bot, Beetle-bot, Quadru-bot, Boat-bot,Walker-bot, Dog-bot, and Wheel-bot. Then they can challenge their manipulative skills with the second level: Roly Poly-bot, Auto-bot, Slither-bot, Surf-bot, Boxer-bot, Crab-bot and Row-bot.

Tool You May Need

Diagonal Cutter

Mechanical Parts List

P1 Motor With Connectors

Don't connect the wires to the mains.

QTY
1

P2 Solar Panel With Springs

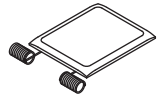

QTY
1

P3 Pinion Gear(yellow)

QTY
1

P4 Gear With Shaft

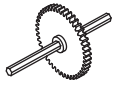

QTY
1

P5 Gear(Red)

QTY
1

P9 boat

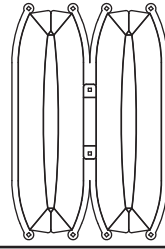

QTY	1

P6 Gear(Green)

QTY
1

P7 Sponge

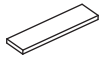

QTY
2

P8 Round Shaft

QTY
1

Plastic Parts

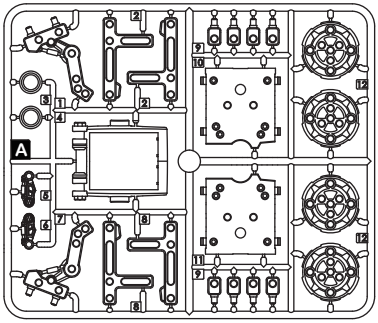

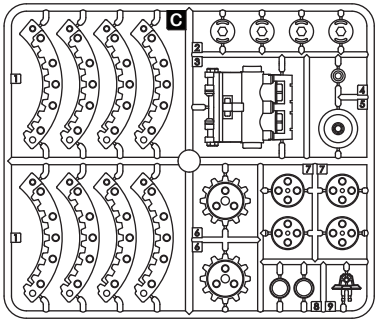

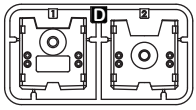

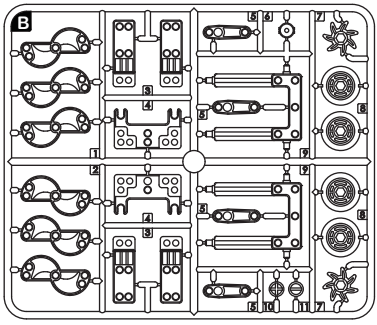

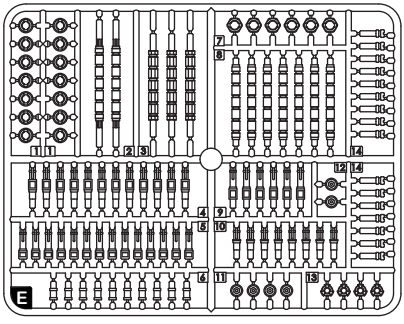

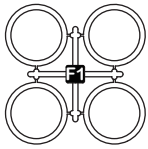

Sticker A

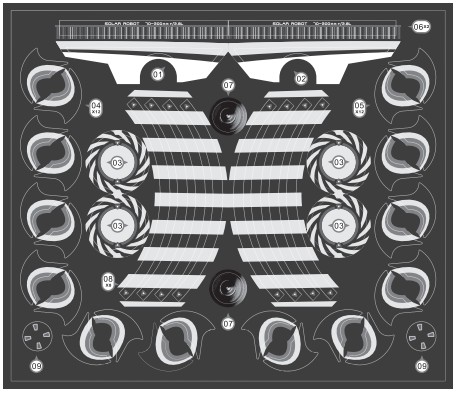

QTY	1

Make sure to cut the plastic parts E correctly.

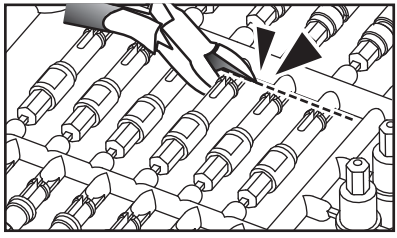

O

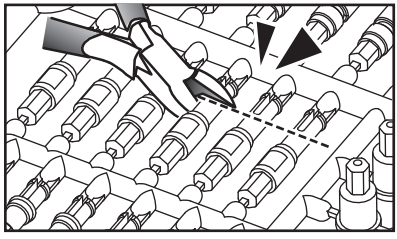

X

Sticker B

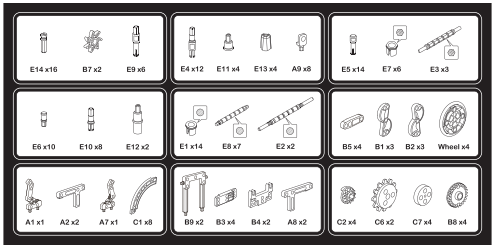

QTY
1

Zipper bag

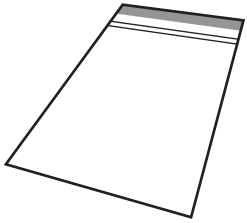

QTY
9

Tip

For easy identification of each plastic part, suggest to sort out plastic parts and put them into zipper bags as per instruction.

(P.S. Each zipper bag to be placed an illustrated sticker B (as below) first.)

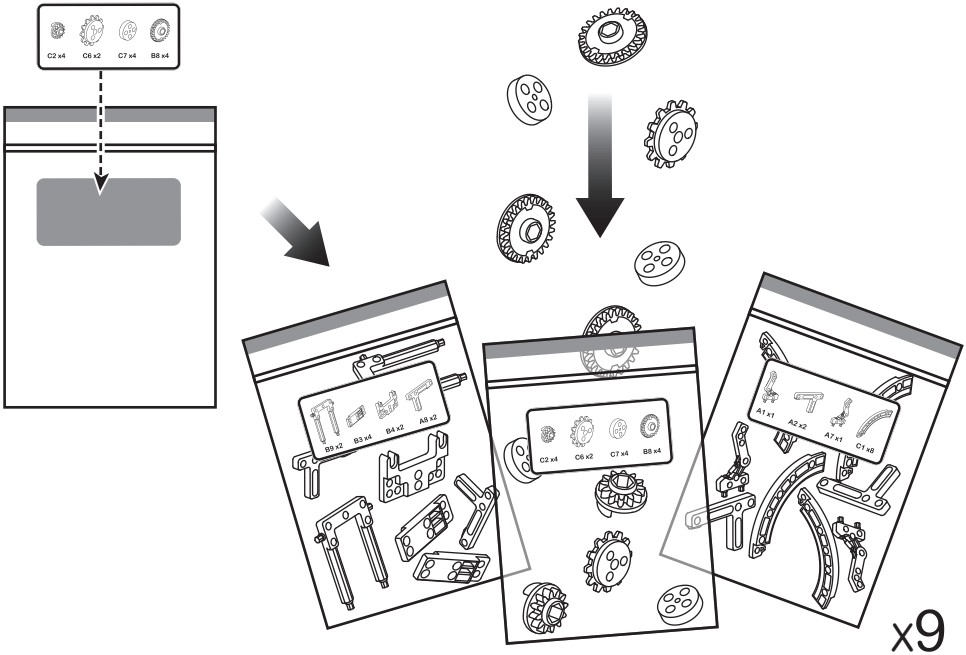

Body Module Assembly

Finished Product

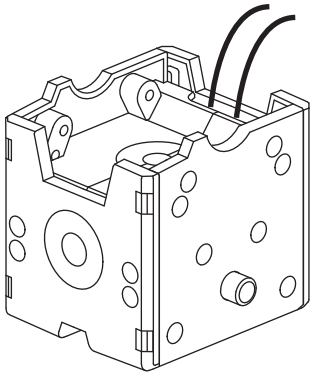

B 1

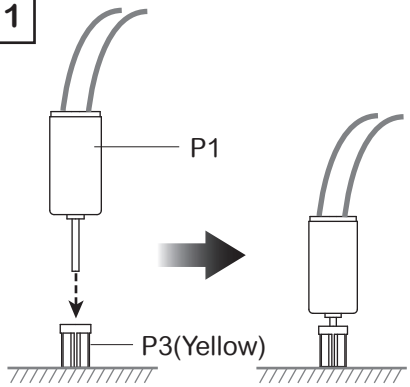

B 2

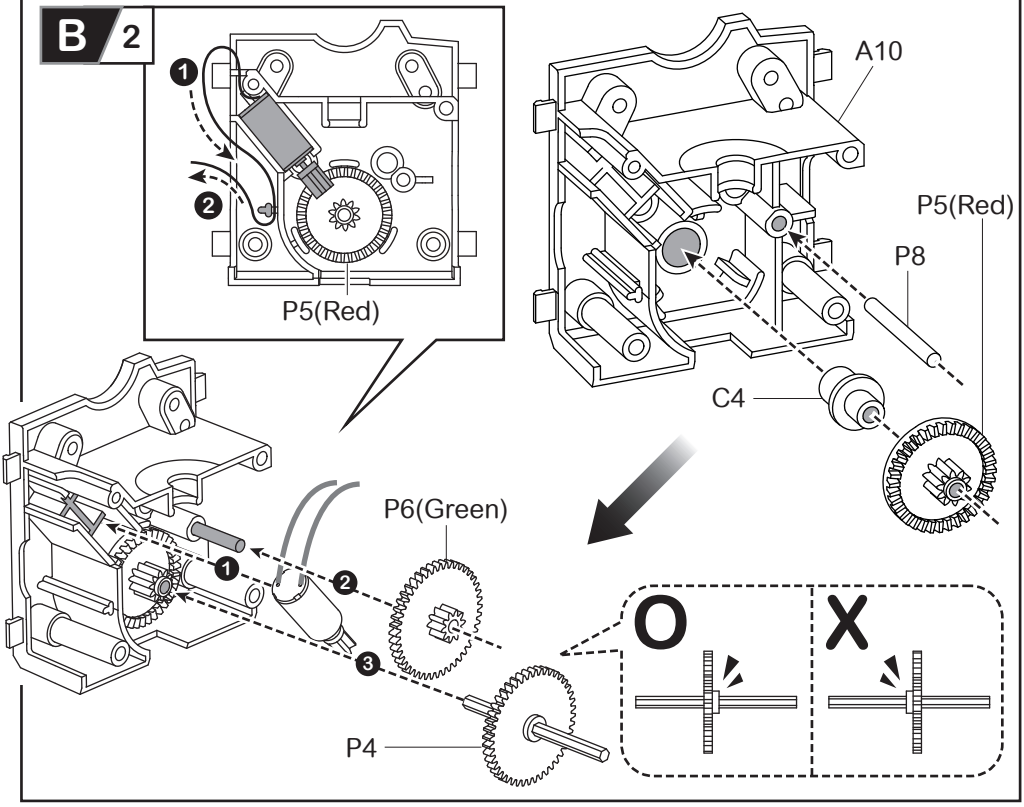

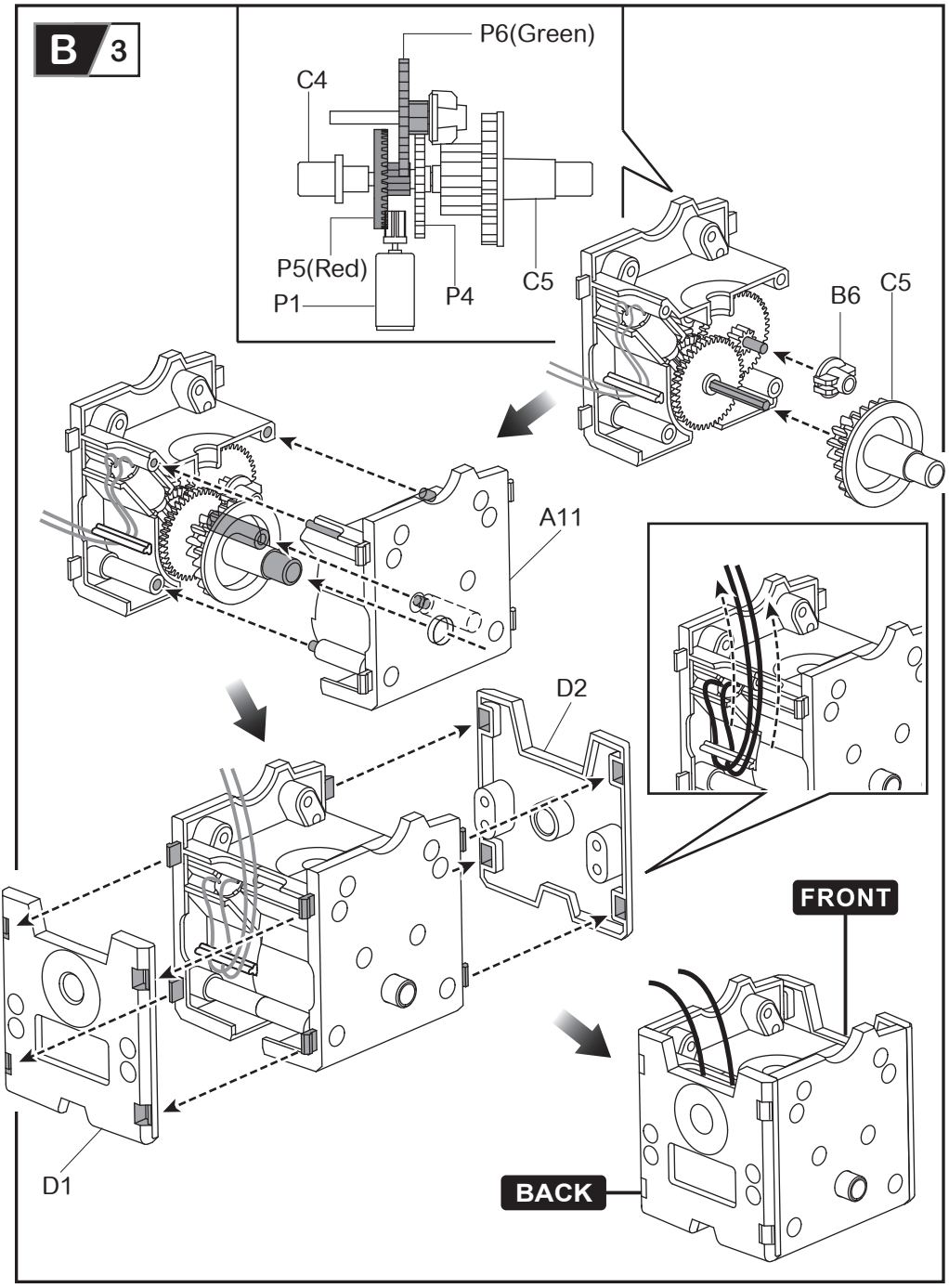
B 3
P6(Green)
C4
P5(Red)
P1
P4
C5
B6
C5
A11
D2
FRONT
BACK
D1

Head Module Assembly

Finished Product

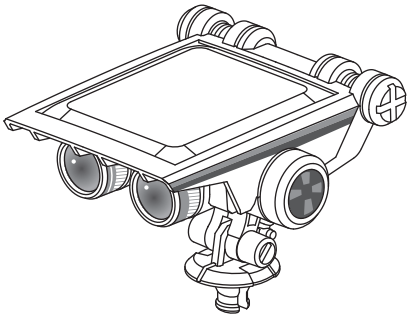

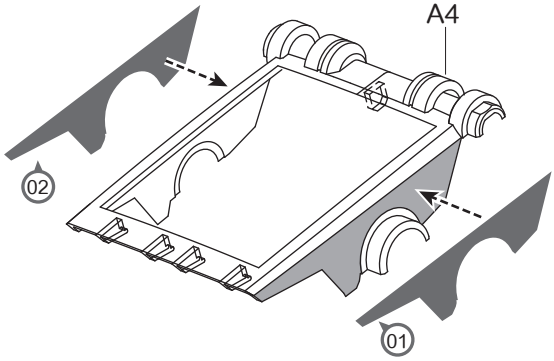

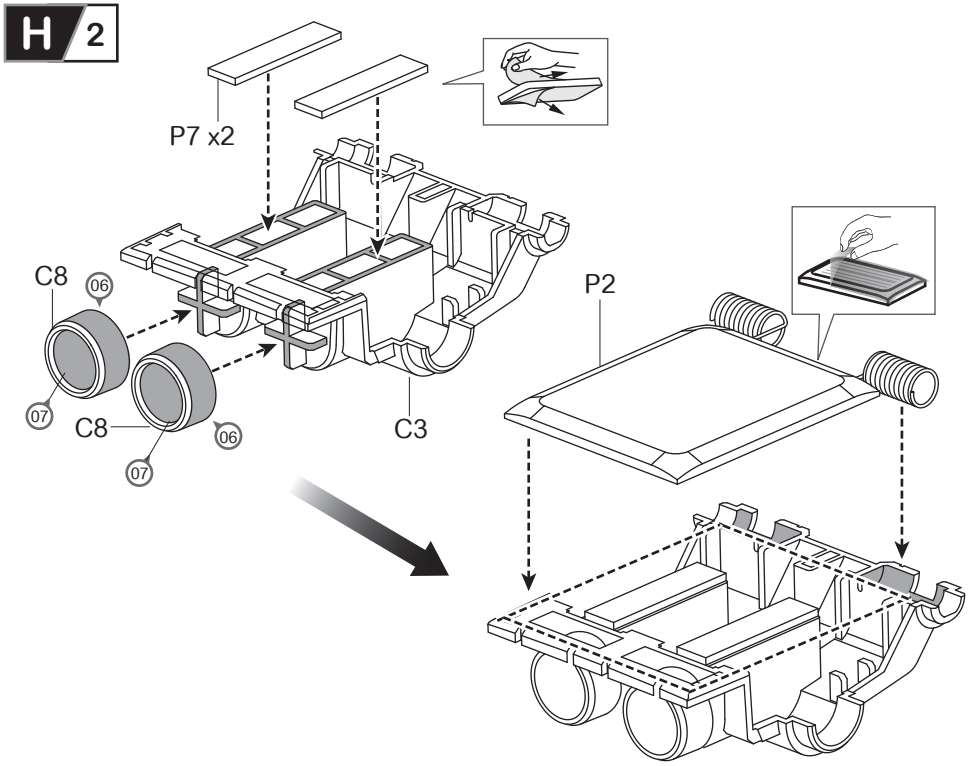

H 3

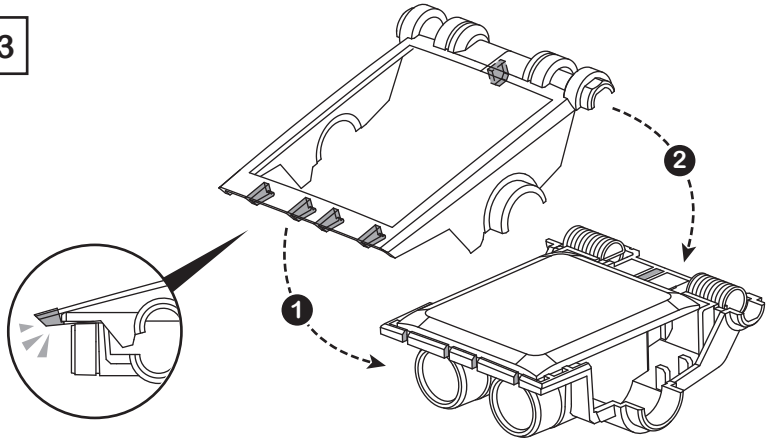

H 4

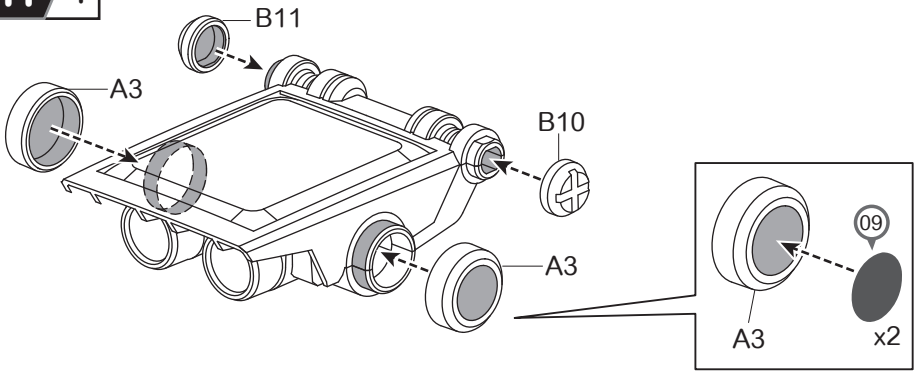

H 5

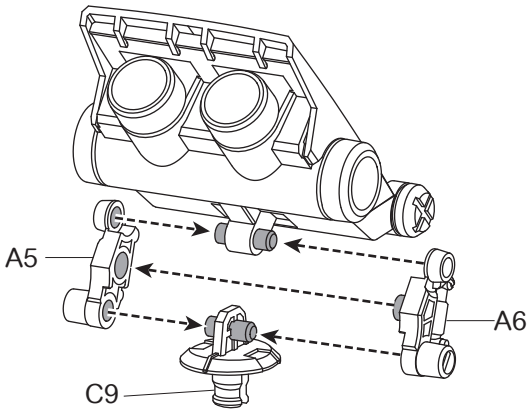

Testing : You need to test the gear box first.

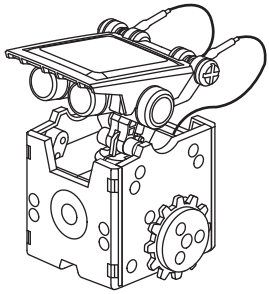

Prepare the below parts first before you test the “Gear box” and “Solar panel”.

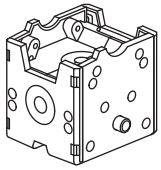

Body
(Gear Box)

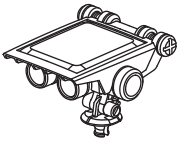

Head
(Solar Panel)

C6 x2

01 Assembly

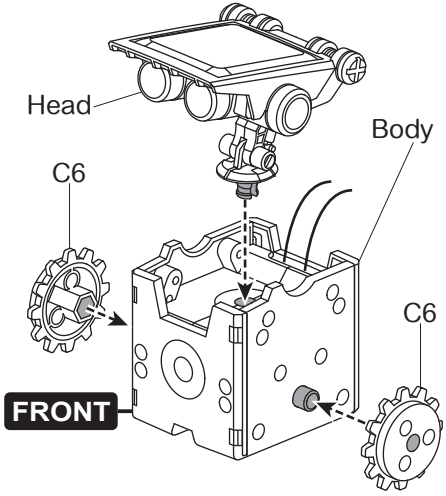

02 Wiring

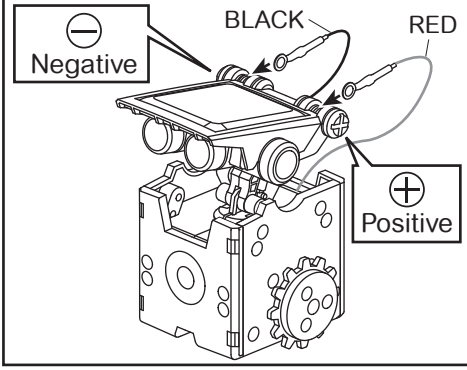

03 Testing

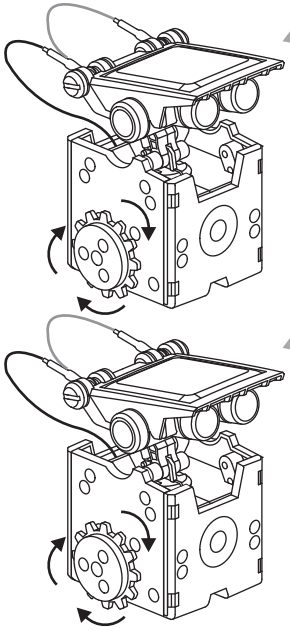

SUN

OR

50W & UP
HALOGEN

Make sure C6 is turning !

04 Trouble shooting

If C6 does not work,
Please disassemble the gear box,
and back to the page 4.

Wheel Module Assembly

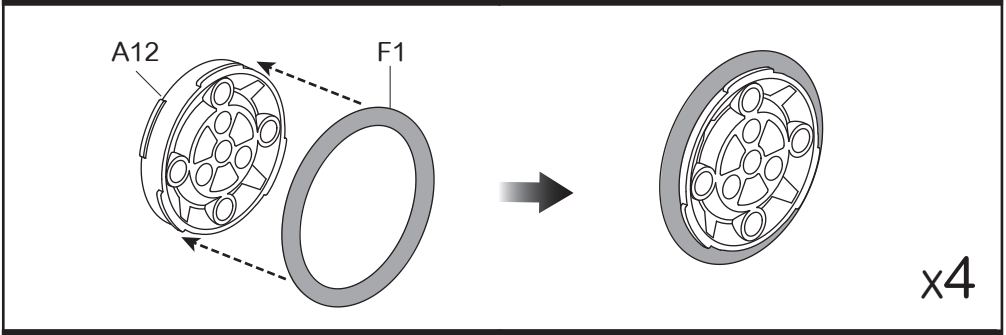

Sticker A

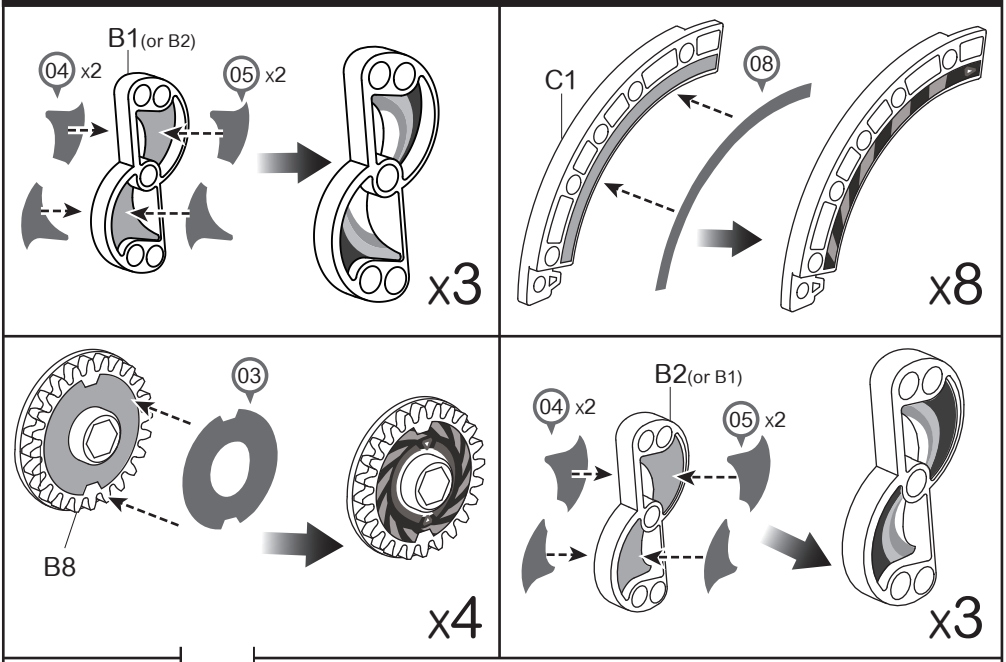

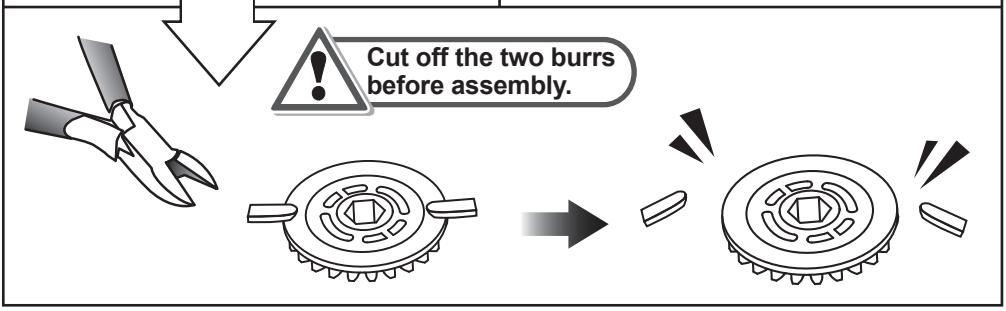

Boat Module Assembly

form the boat

P9

Valley fold

Mountain fold

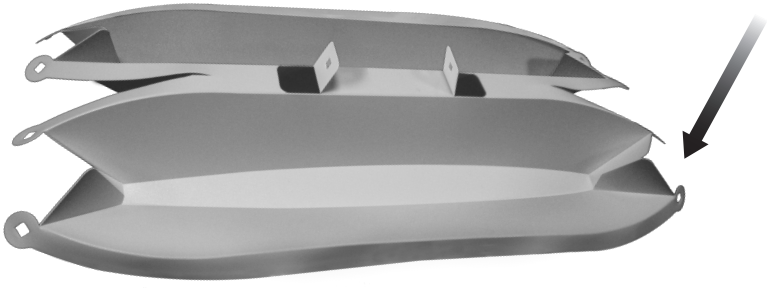

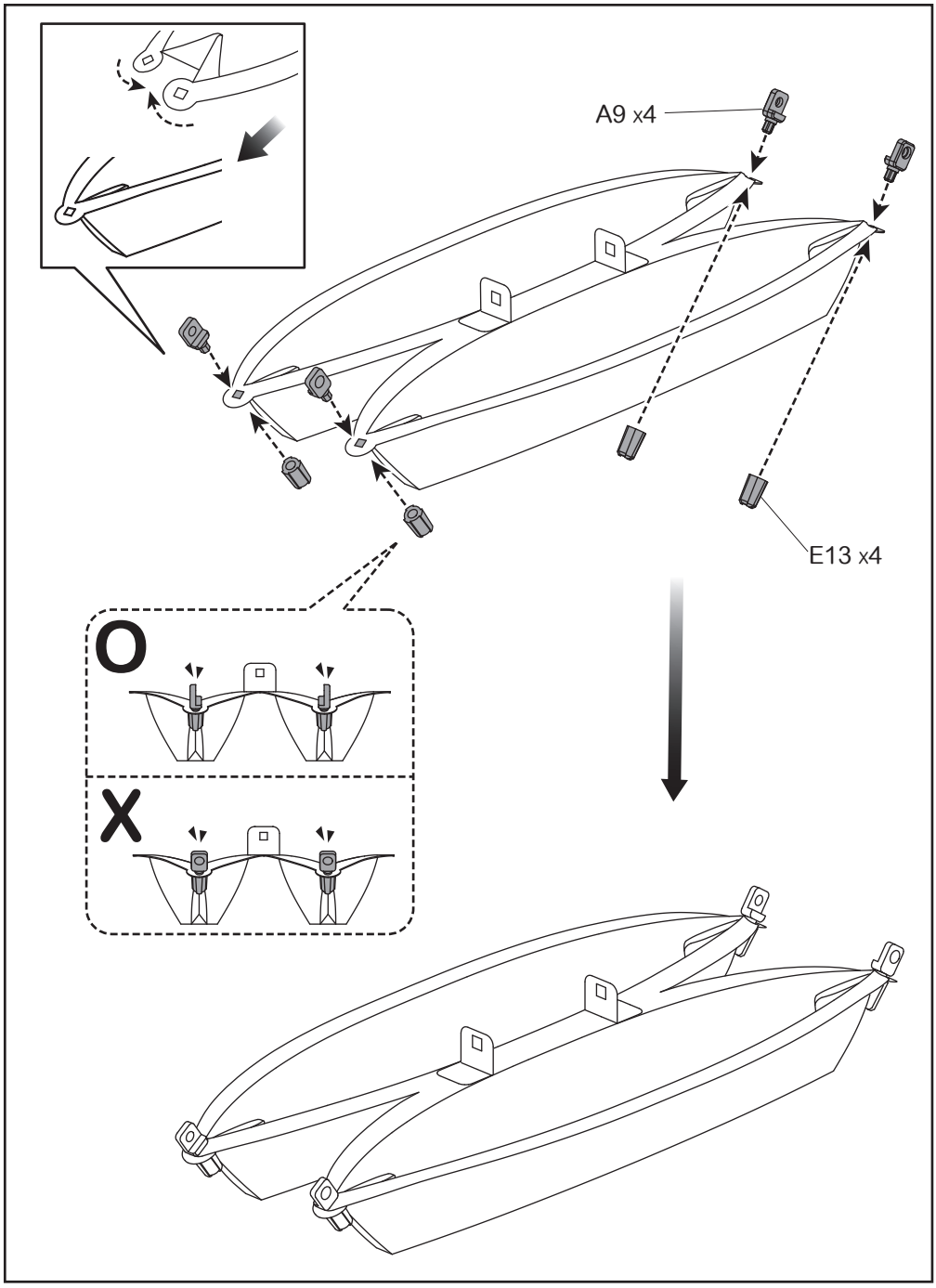
A9 x4
E13 x4
O
X

Tips (When your part's stuck.)

Example 1

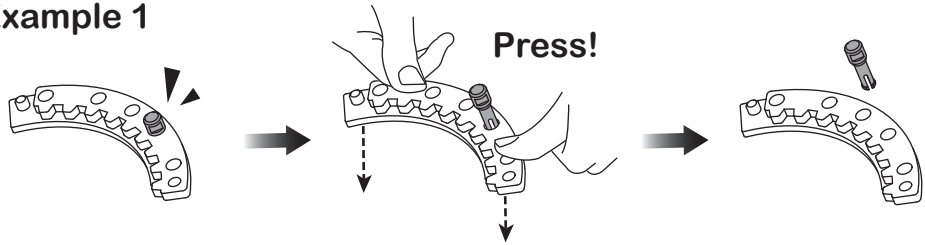

Example 2

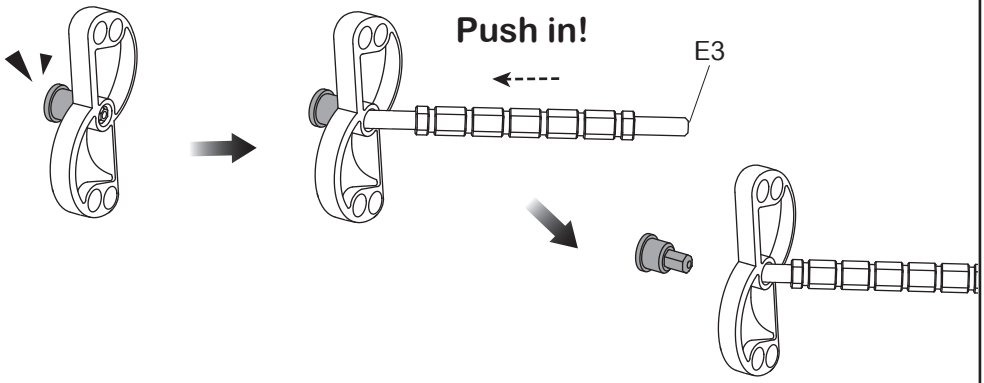

Example 3

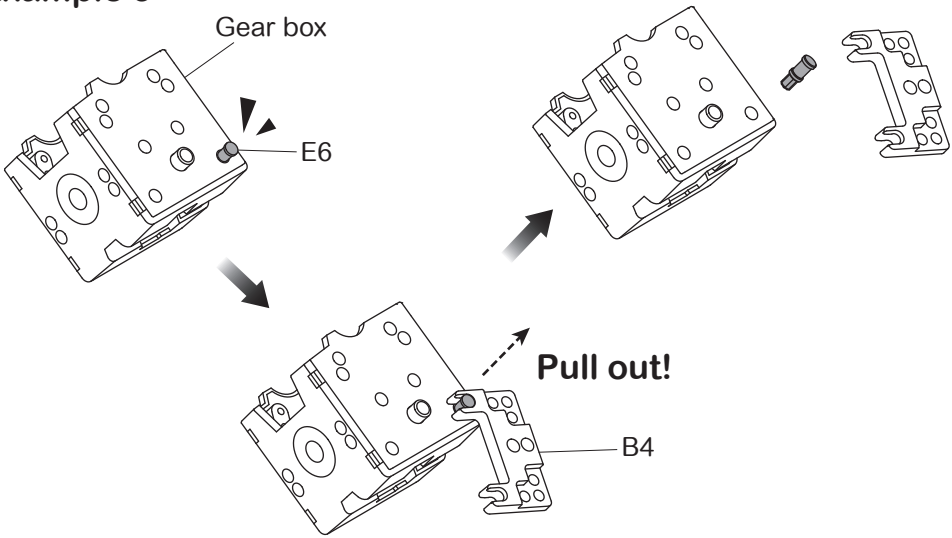

14 Robot Modes

LEVEL 1

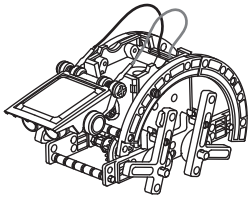

P.14 01 Turtle-bot

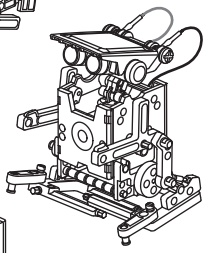

02 P.19 Walker-bot

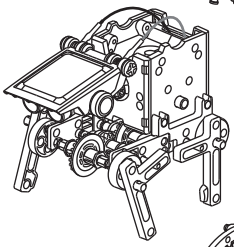

P.22 03 Quadru-bot

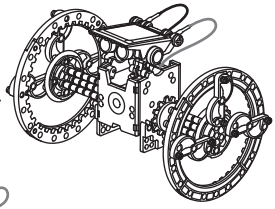

04 P.27 Wheel-bot

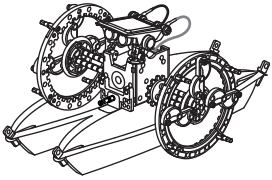

P.32 05 Boat-bot

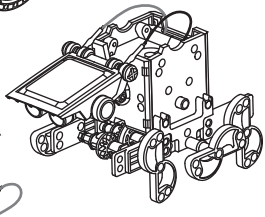

06 P.37 Beetle-bot

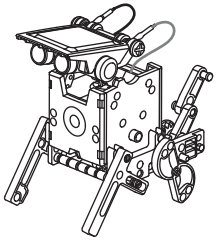

P.42 07 Dog-bot

LEVEL 2

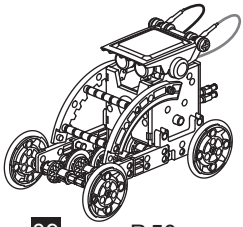

P.46 08 Auto-bot

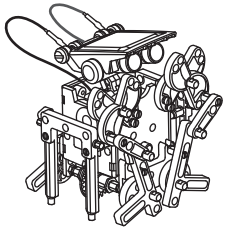

09 P.50 Crab-bot

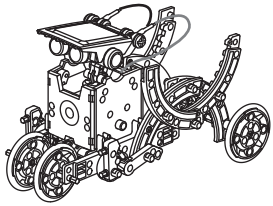

P.55 10 Slither-bot

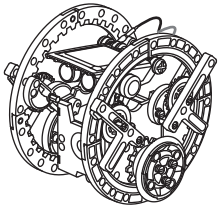

11 P.60 Roly poly-bot

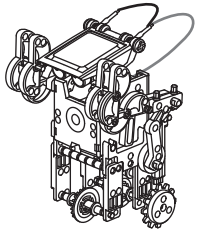

P.66 12 Boxer-bot

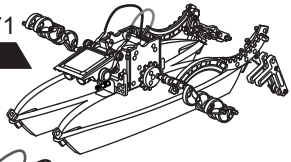

13 P.71 Surf-bot

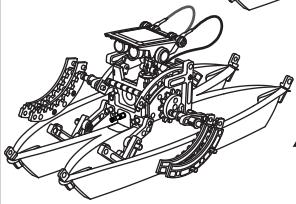

P.76 14 Row-bot

01 Turtle-bot Assembly

Level 1

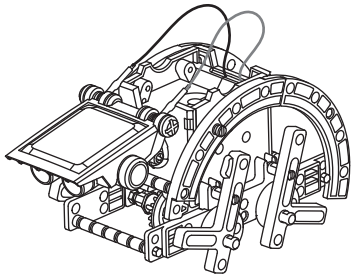

Prepare the below parts first before you assemble the "Turtle-bot".

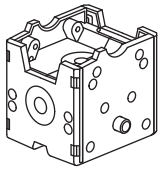

Body

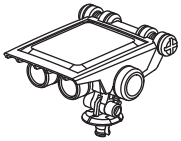

Head

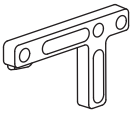

A2 x2

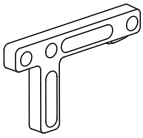

A8 x2

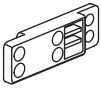

B3 x4

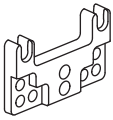

B4 x2

B8 x3

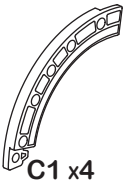

C1 x4

C2 x1

C7 x4

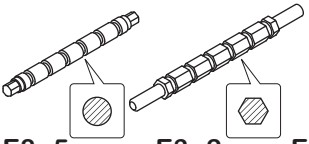

E8 x5

E3 x2

E6 x4

E14 x2

E5 x4

E4 x4

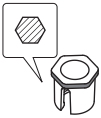

E7 x4

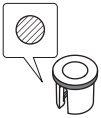

E1 x2

01

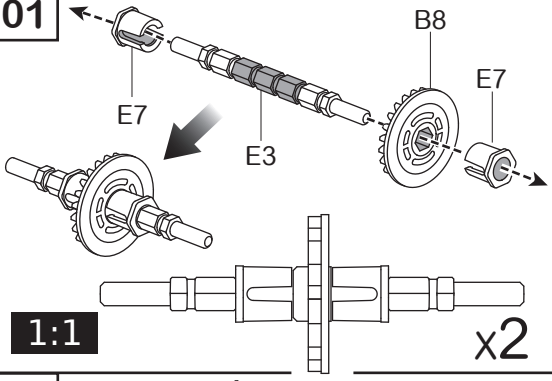

02

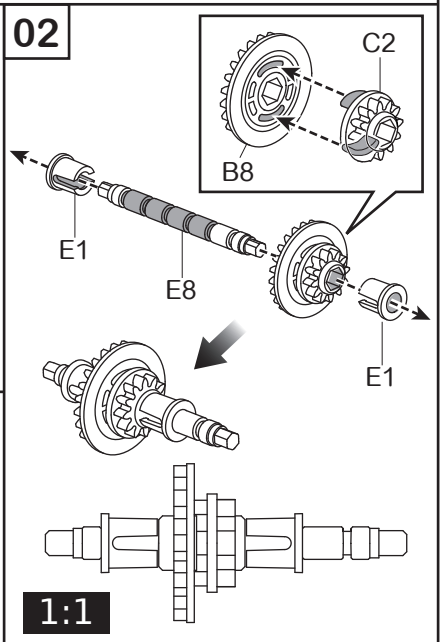

03

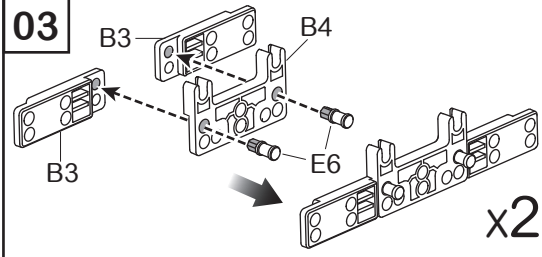

04

Ensure all shafts between panels 03 & 03 are properly installed and set in the right position.

03
E8
01
03
E8
02
01

E8
02
01
01
E8

Check the gear box engagement by rotating it with a finger, and make sure it is running smoothly.

FRONT

01 / 1

Body
E4
E4
E4
E4

01 / 2

FRONT
04
FRONT

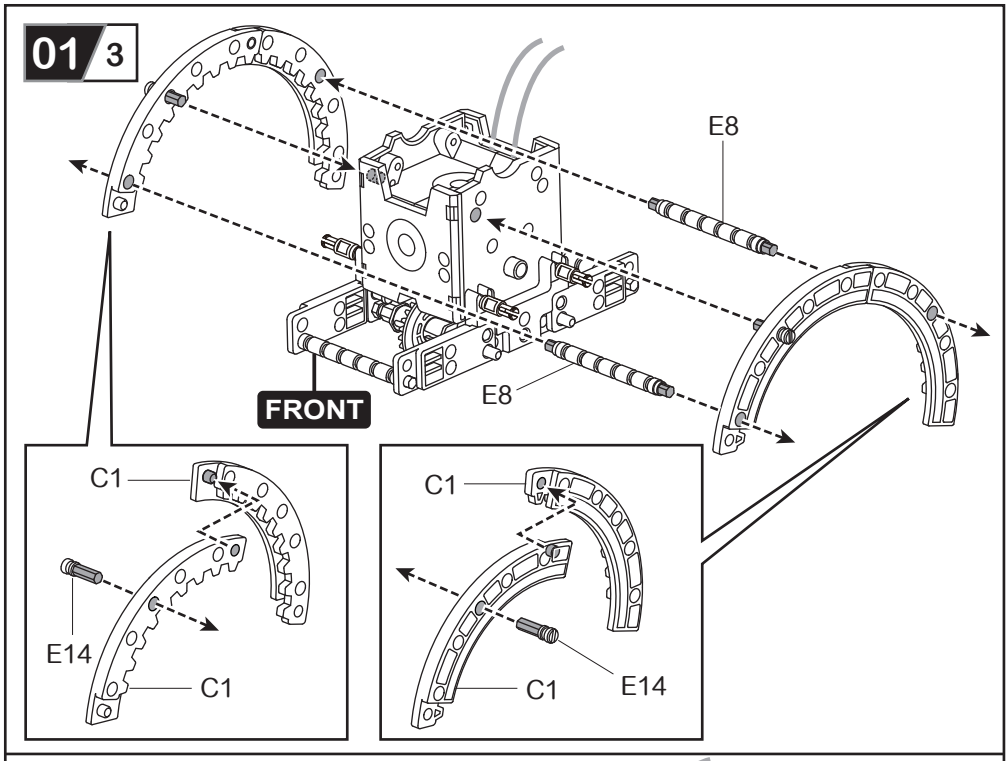
01 3
E8
E8
FRONT
C1
E14
C1
C1
C1
E14

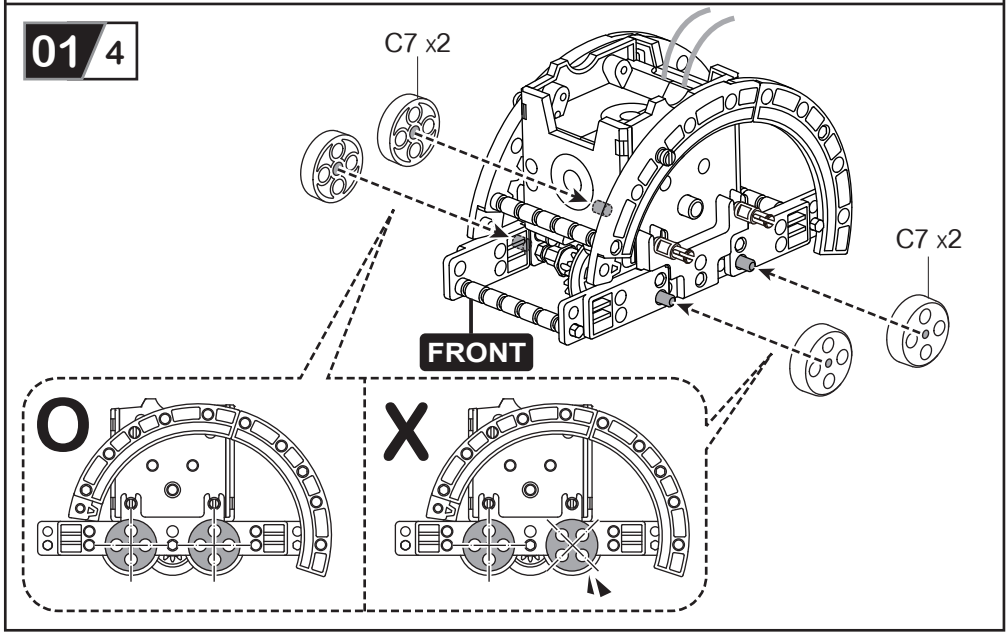
01 4
C7 x2
C7 x2
FRONT
O
X

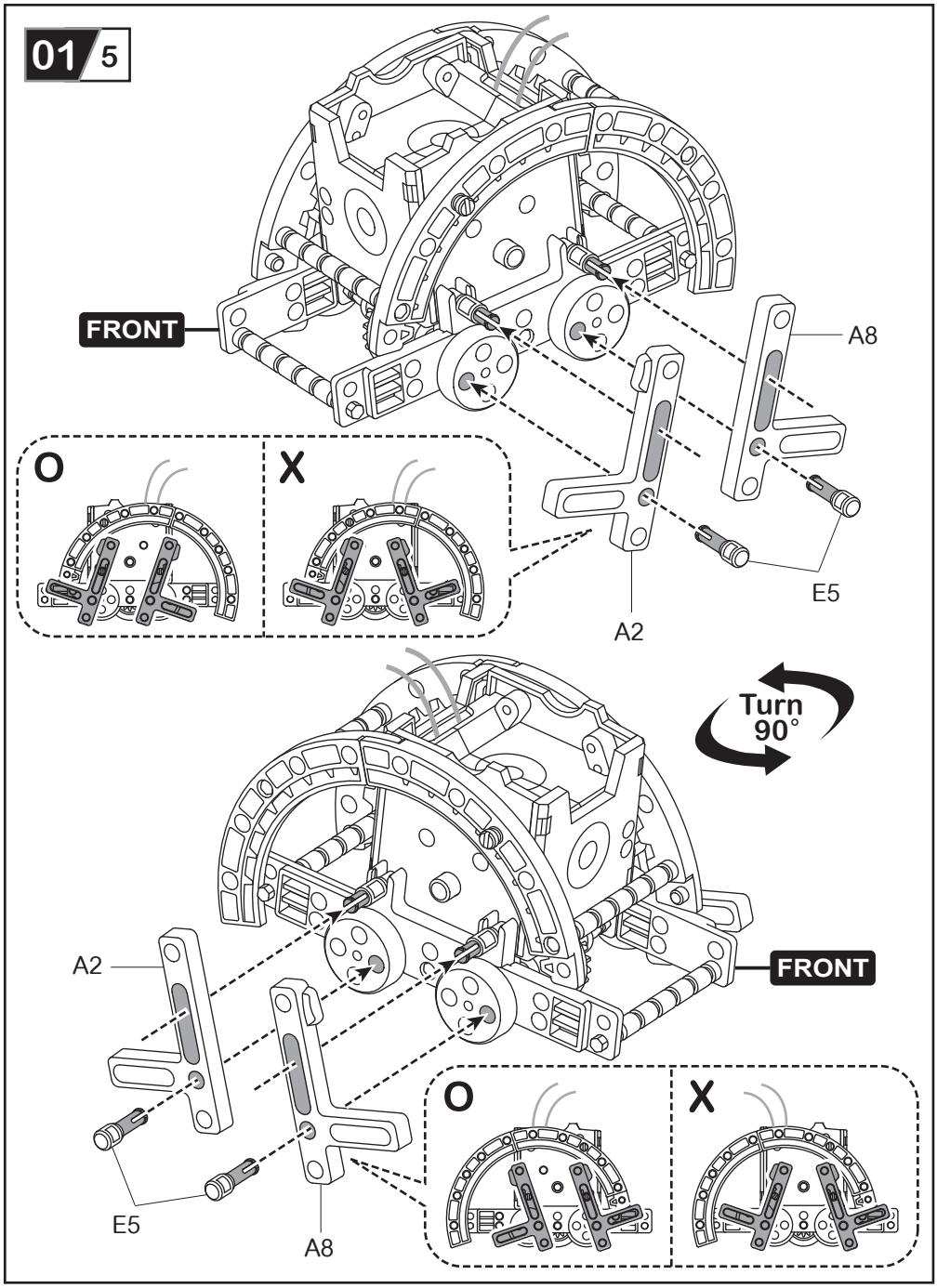
01/5
FRONT
A8
O
X
E5
A2
Turn 90°
A2
FRONT
O
X
E5
A8

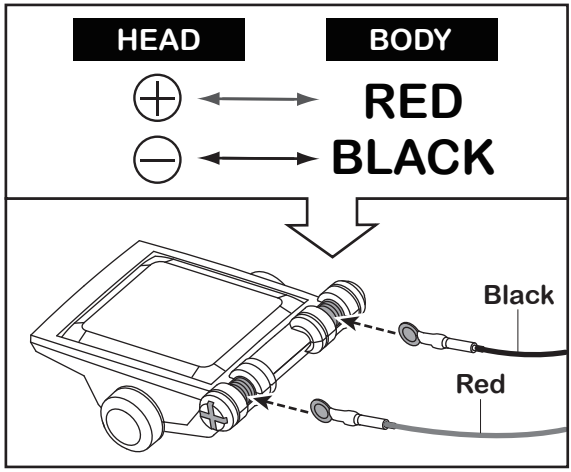
HEAD
BODY
RED
BLACK
Black
Red

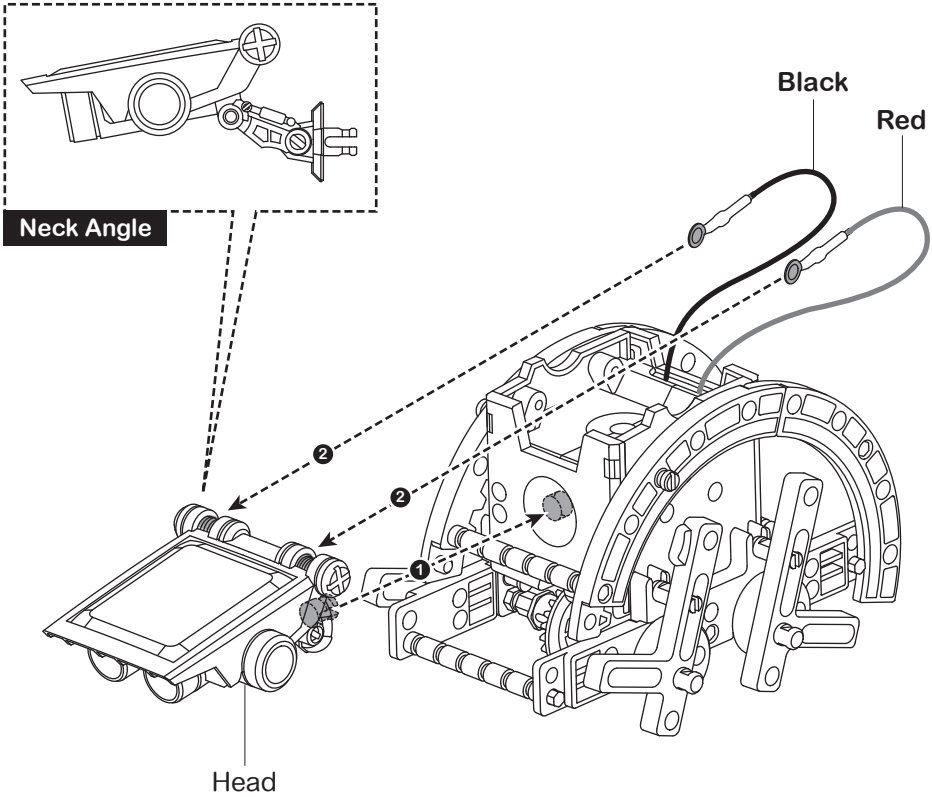
Neck Angle
Black
Red
❷
❷
❶
Head

02 Walker - bot Assembly

Level 1

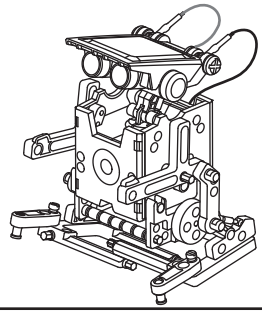

Prepare the below parts first before you assemble the "Walker-bot".

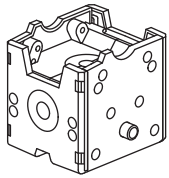

Body

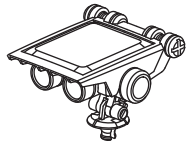

Head

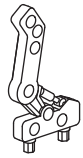

A1 x1

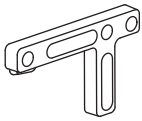

A2 x1

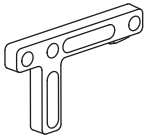

A8 x1

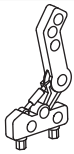

A7 x1

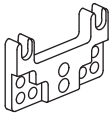

B4 x2

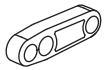

B5 x2

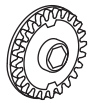

B8 x1

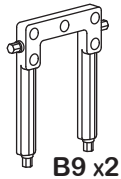

B9 x2

C7 x2

E6 x6

E14 x2

E5 x4

E4 x2

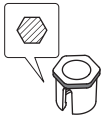

E7 x2

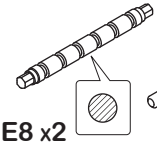

E8 x2

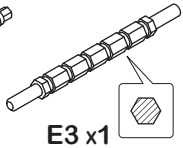

E3 x1

01

1:1

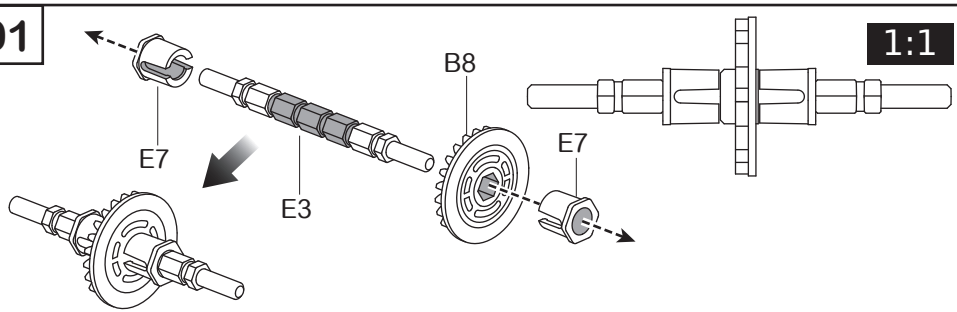

02

Ensure all shafts between panels B4 & B4 are properly installed and set in the right position.

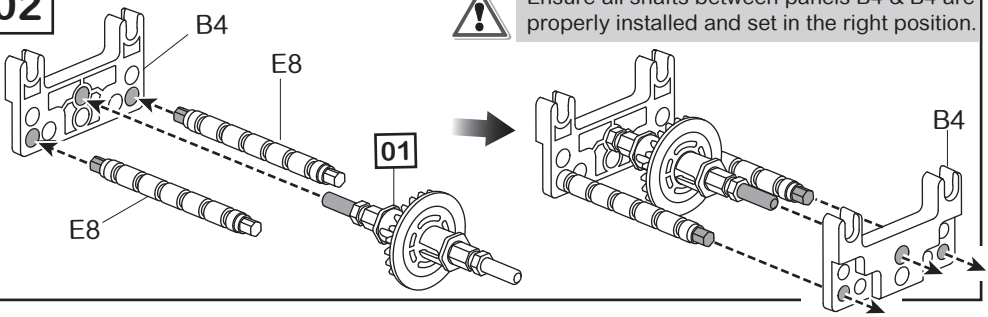

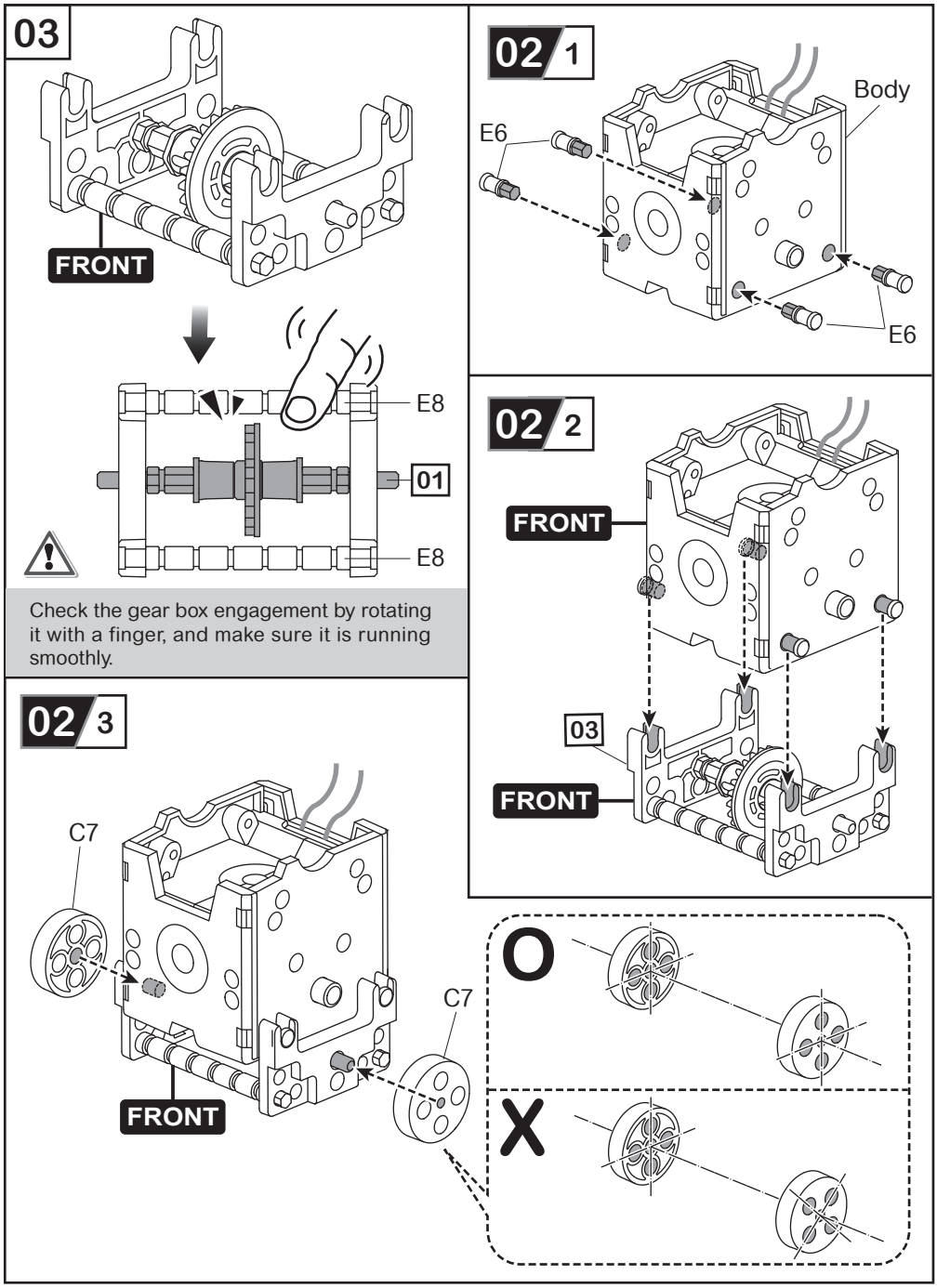

Check the gear box engagement by rotating it with a finger, and make sure it is running smoothly.

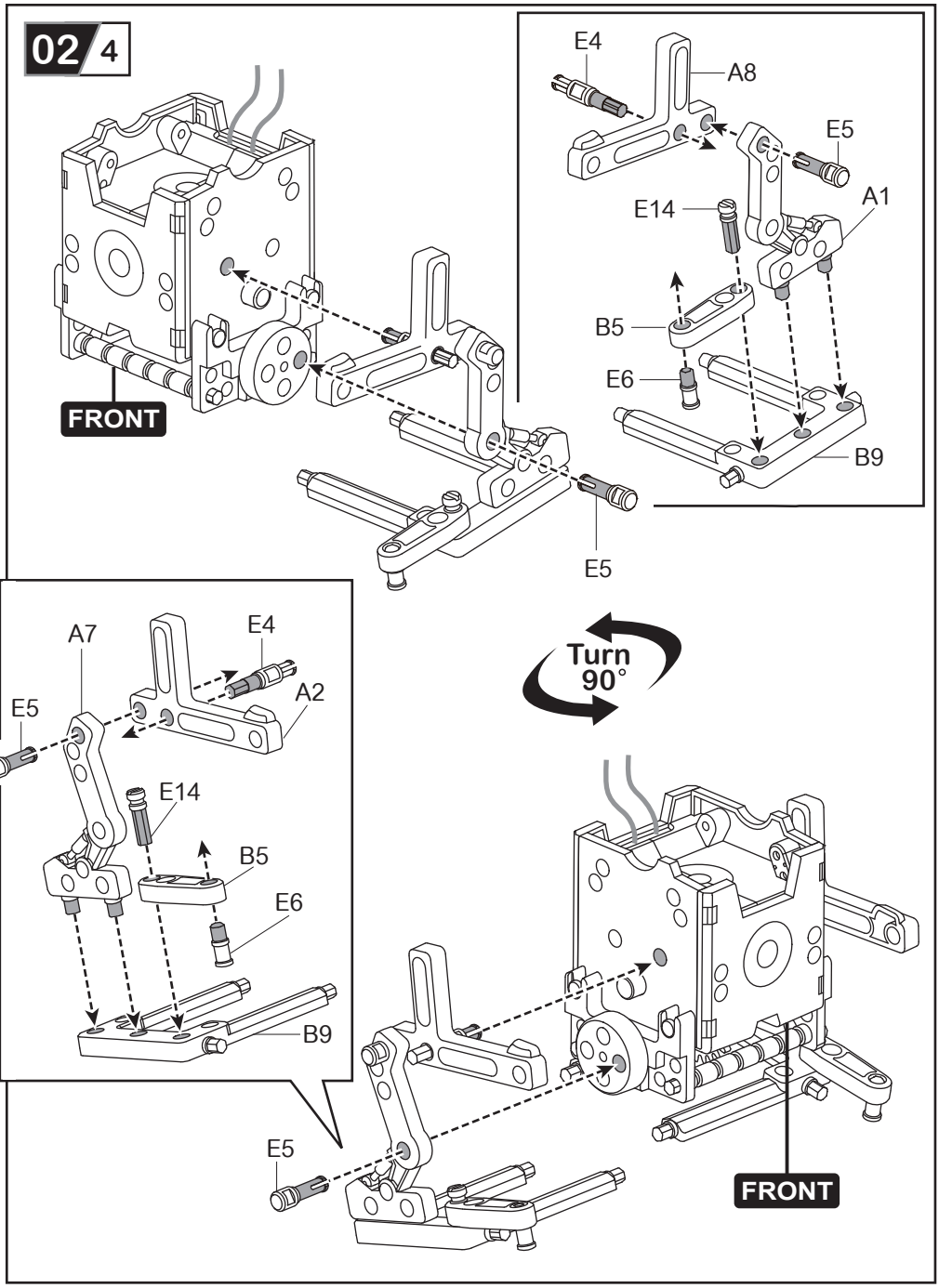
02 4
E4
A8
E5
A1
E14
B5
E6
B9
FRONT
E5
Turn 90°
A7
E4
A2
E5
E14
B5
E6
B9
E5
FRONT

02/5

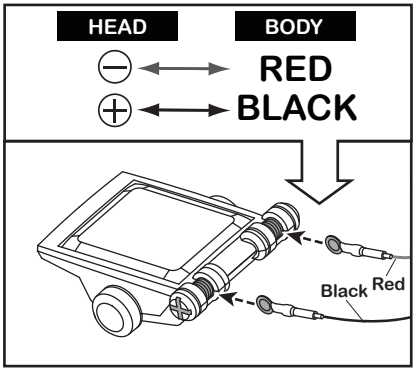

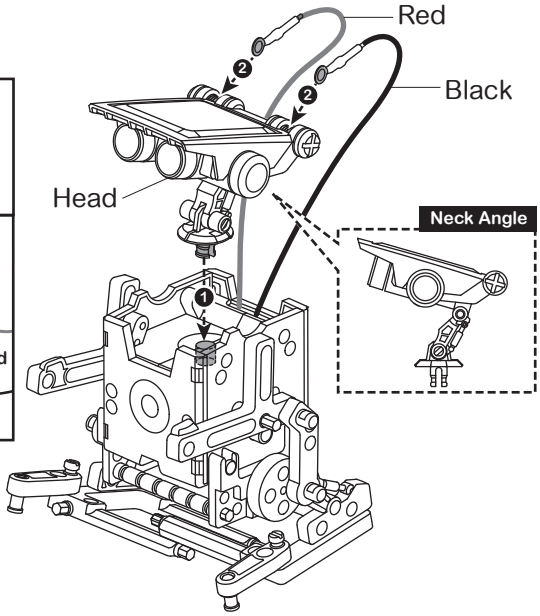

03 Quadru-bot Assembly

Level 1

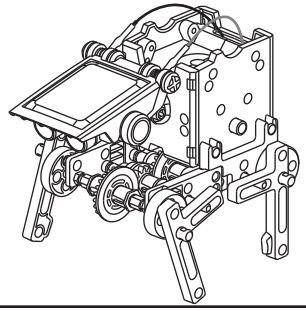

Prepare the below parts first before you assemble the "Quadru-bot".

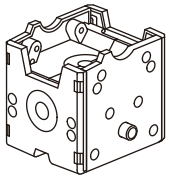

Body

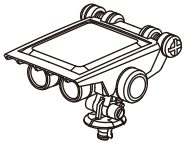

Head

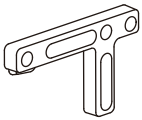

A2 x2

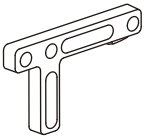

A8 x2

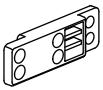

B3 x2

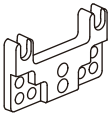

B4 x2

B8 x4

C2 x2

C7 x4

E6 x6

E5 x4

E1 x6

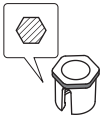

E7 x4

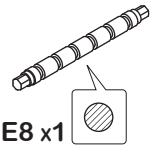

E8 x1

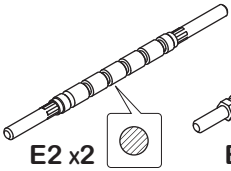

E2 x2

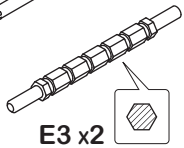

E3 x2

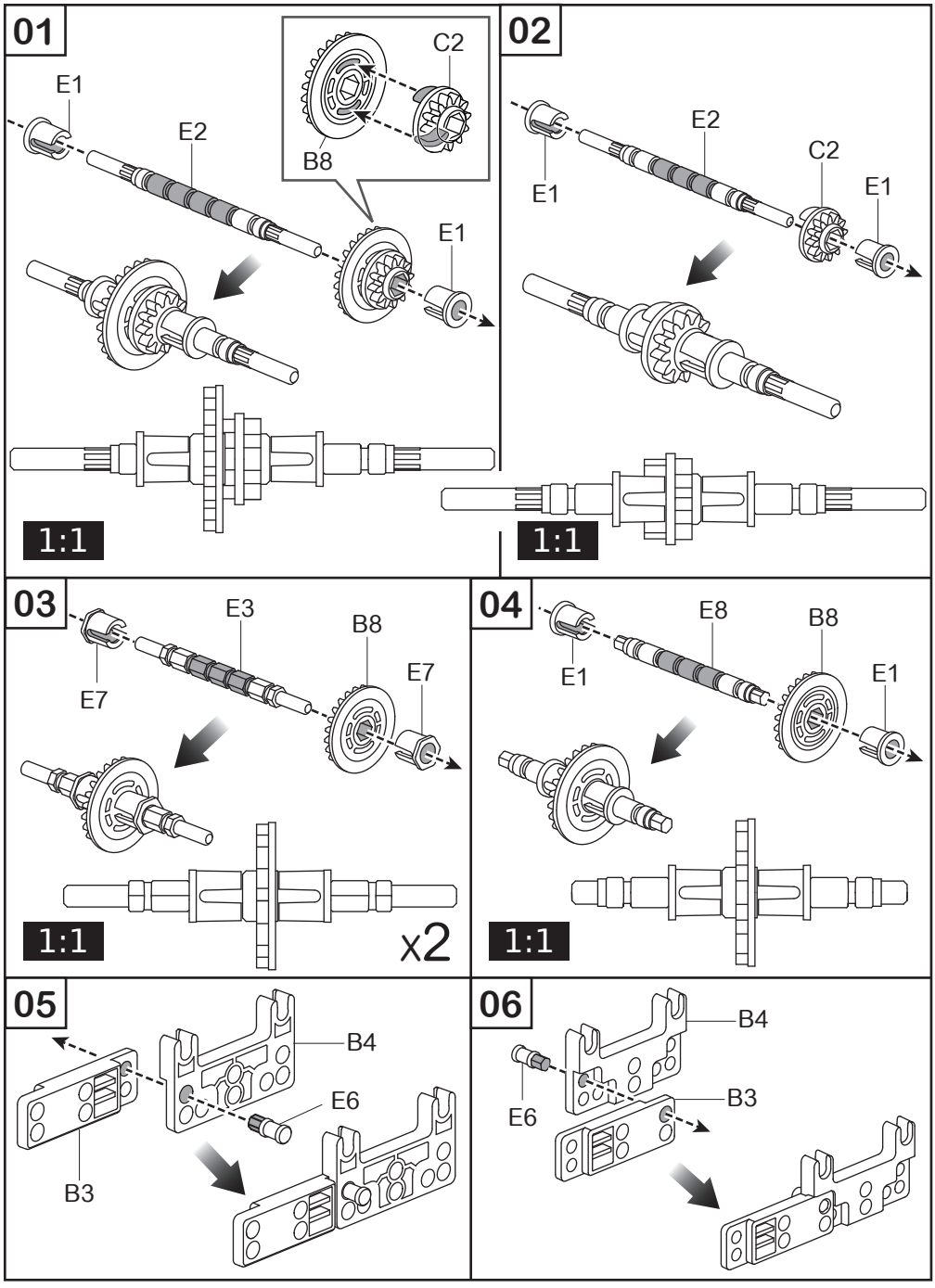
01
E1
E2
C2
B8
E1
1:1
02
E2
C2
E1
E1
1:1
03
E3
B8
E7
E7
1:1
x2
04
E8
B8
E1
E1
1:1
05
B4
E6
B3
06
B4
E6
B3

07

Ensure all shafts between panels 05 & 06 are properly installed and set in the right position.

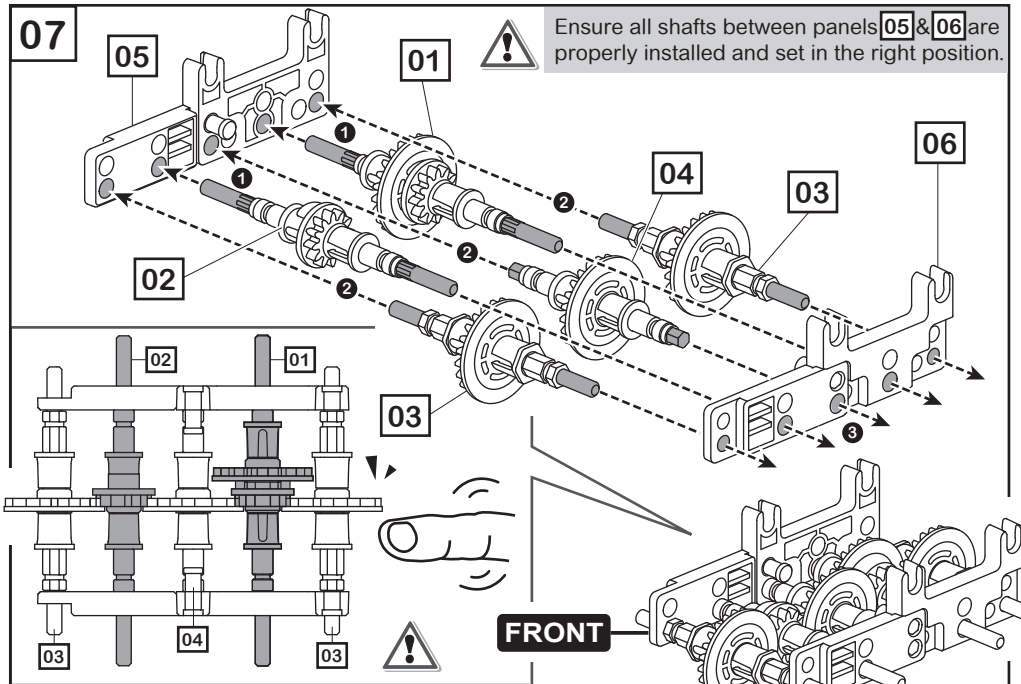

Check the gear box engagement by rotating it with a finger, and make sure it is running smoothly.

03 1

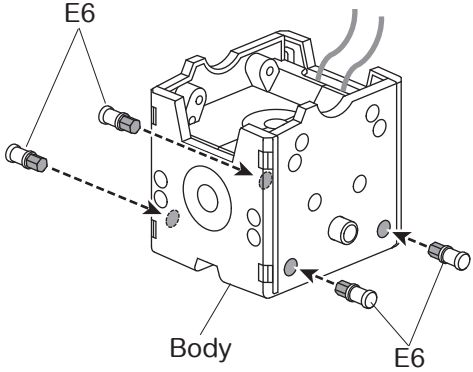

03 2

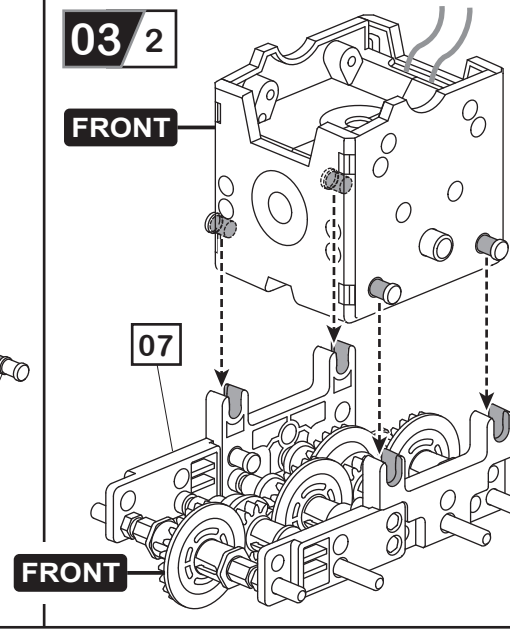

03/3

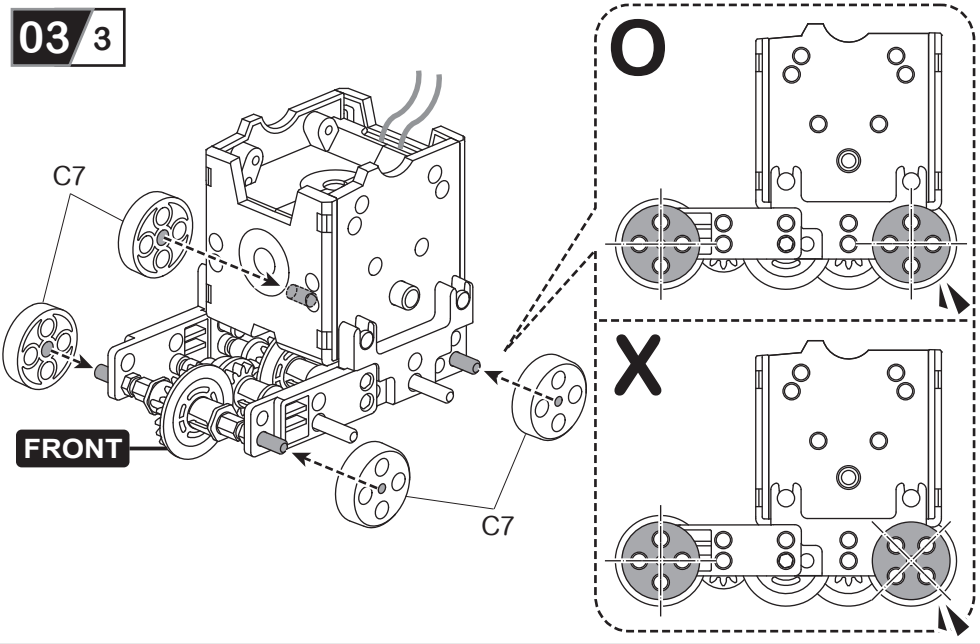

03/4

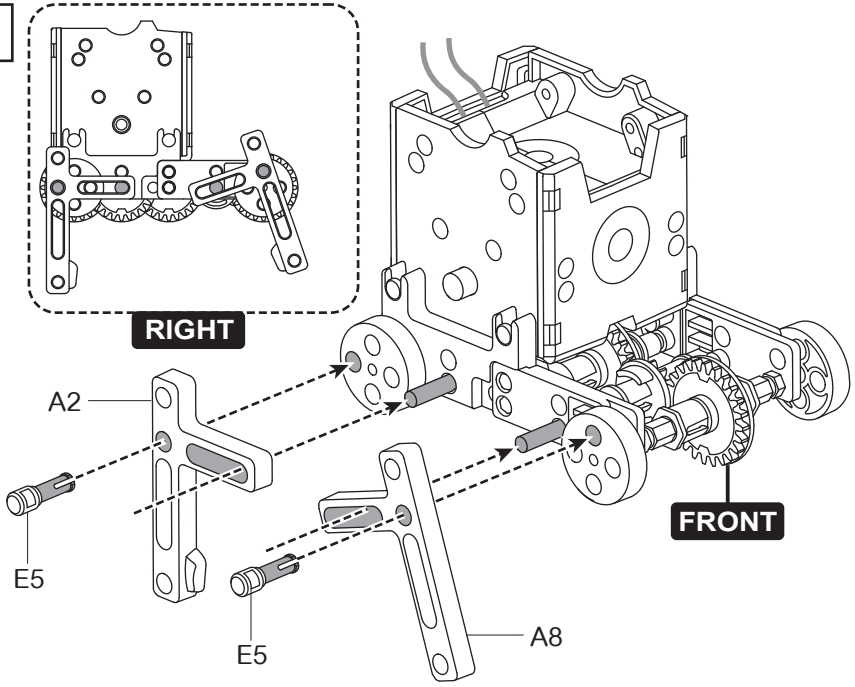

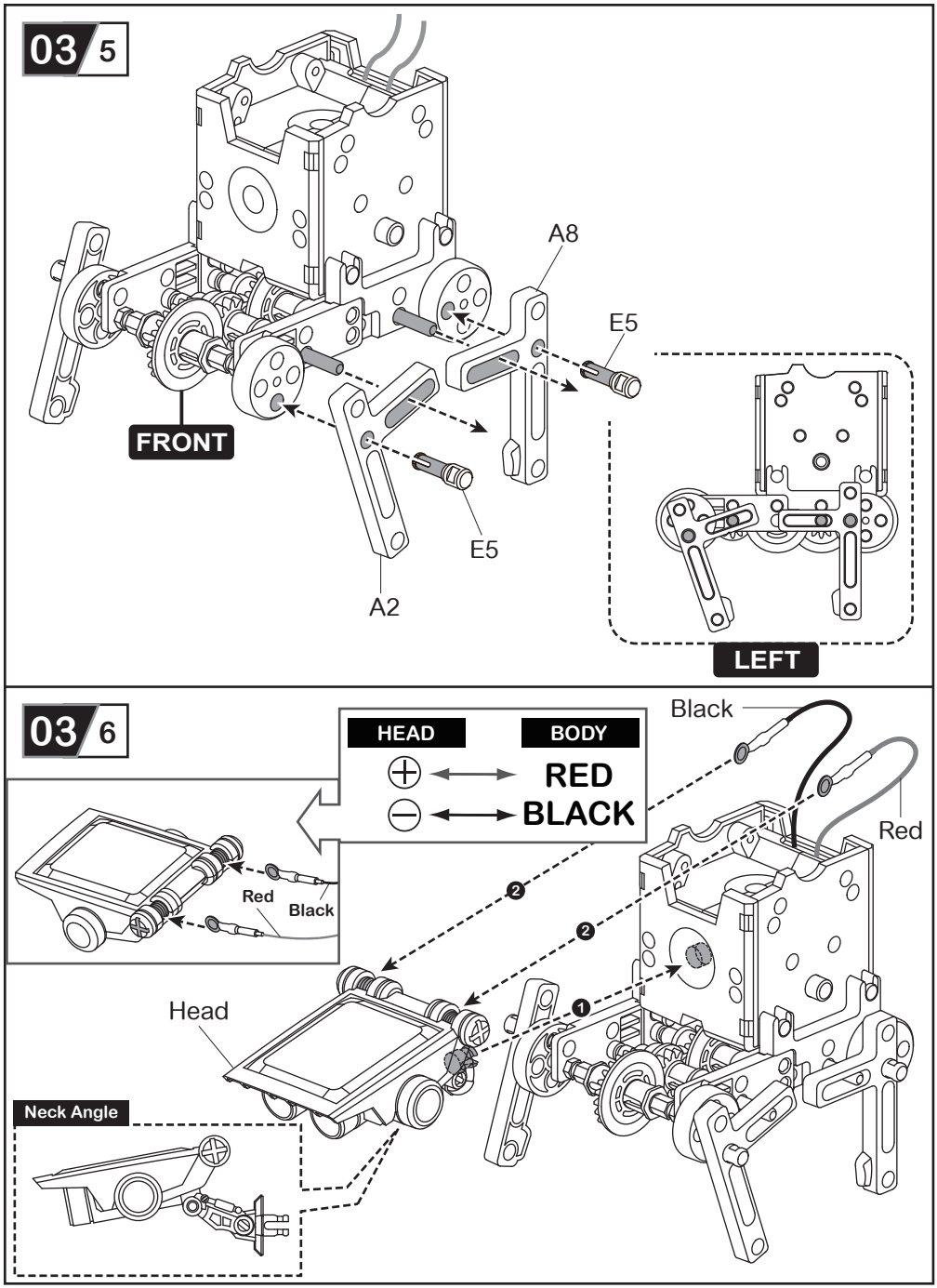
03 5
A8
E5
FRONT
E5
A2
LEFT
03 6
HEAD
BODY
RED
BLACK
Red
Black
Black
Red
Head
Neck Angle

04 Wheel-bot Assembly

Level 1

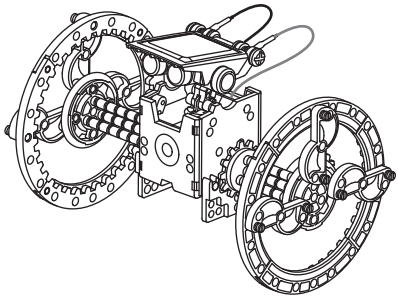

Prepare the below parts first before you assemble the "Wheel-bot".

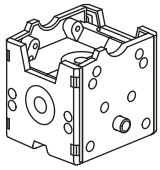

Body

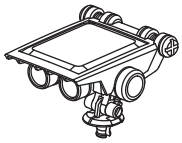

Head

Wheel x4

A1 x1

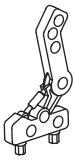

A7 x1

B1 x3

B2 x3

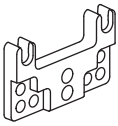

B4 x2

C6 x2

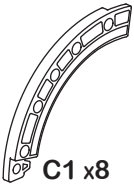

C1 x8

E6 x4

E14 x14

E10 x2

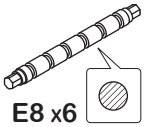

E8 x6

01

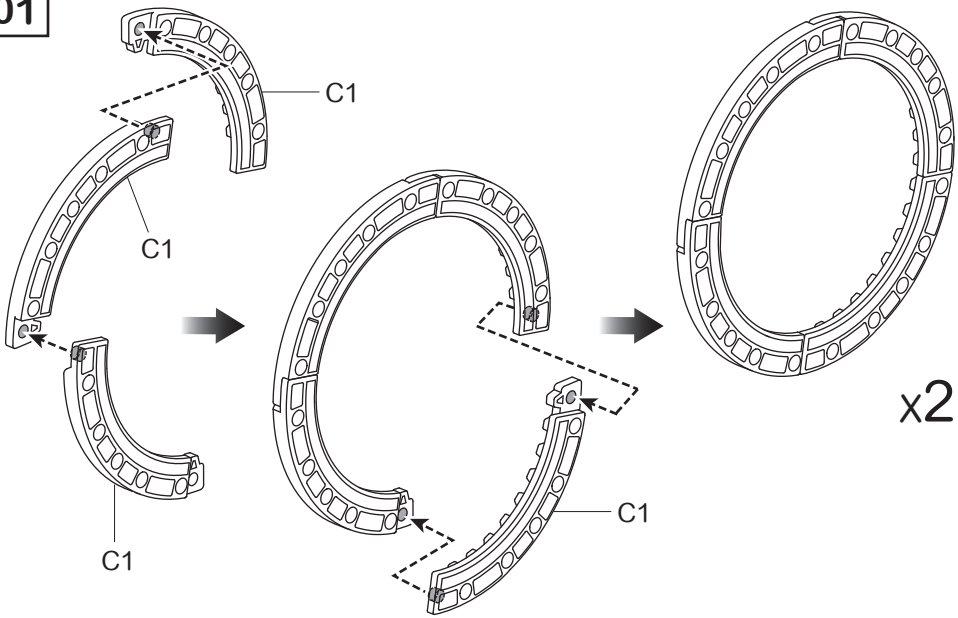

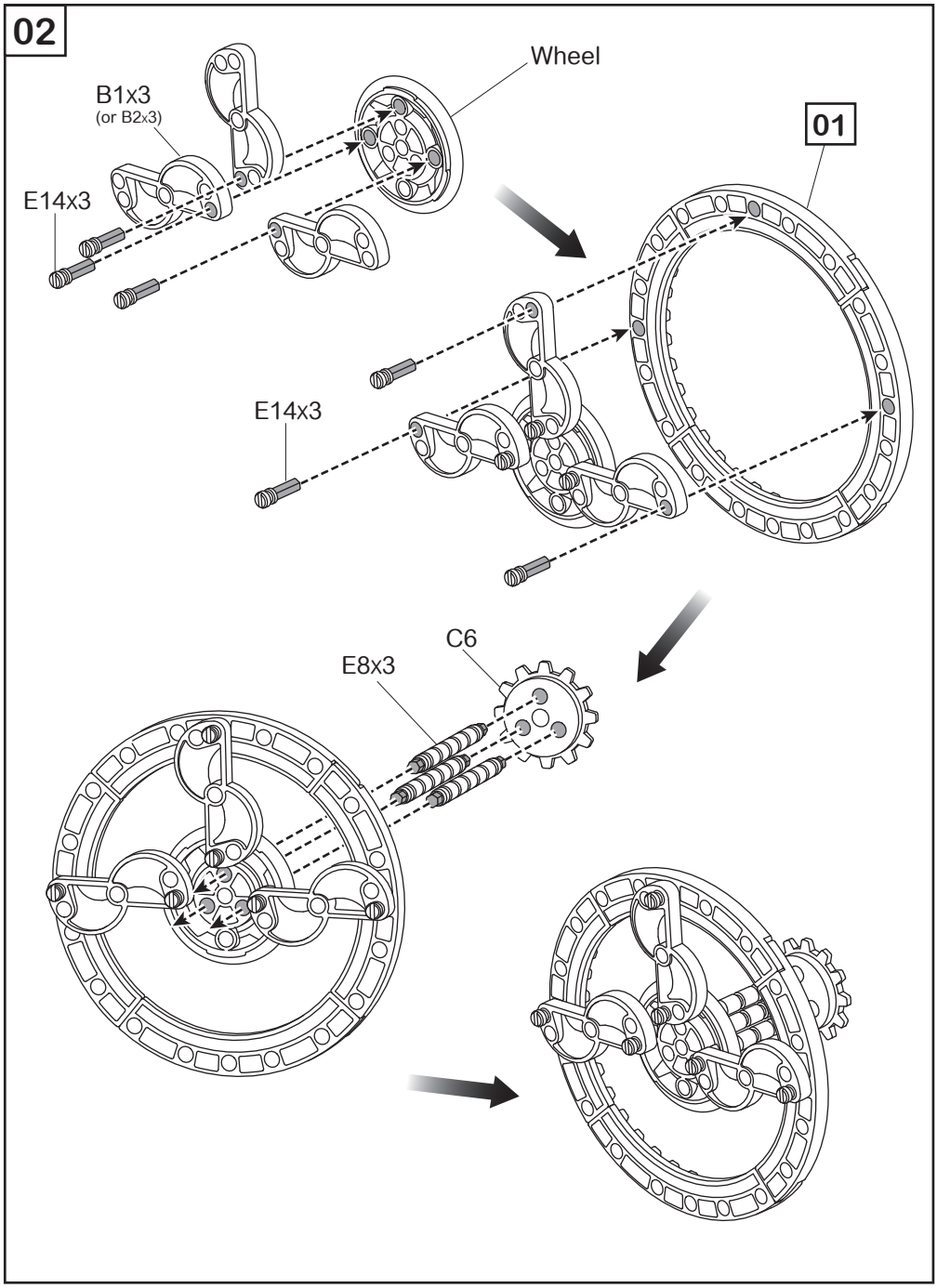
02
Wheel
B1x3
(or B2x3)
01
E14x3
E14x3
C6
E8x3

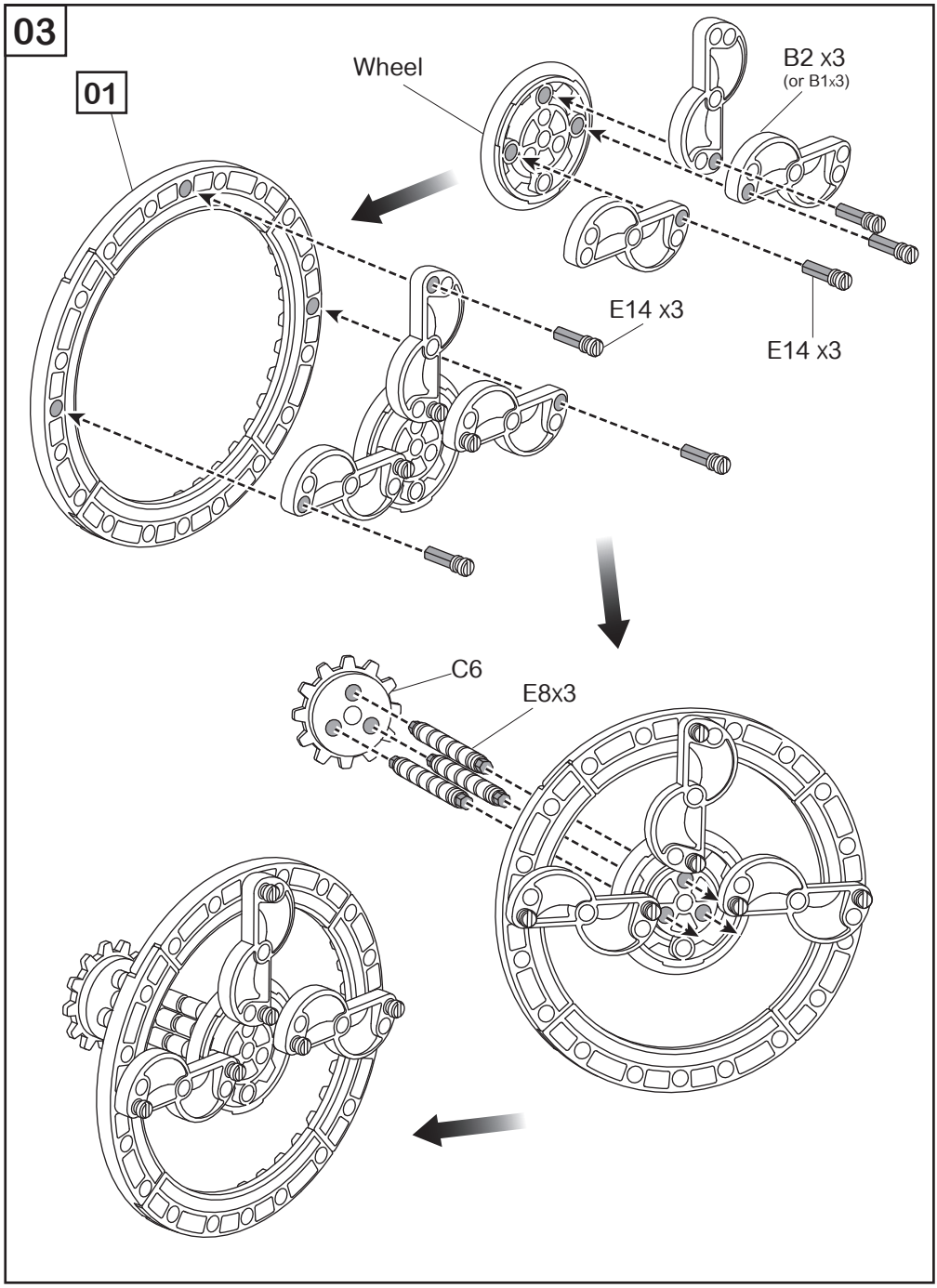
03
01
Wheel
B2 x3
(or B1x3)
E14 x3
E14 x3
C6
E8x3

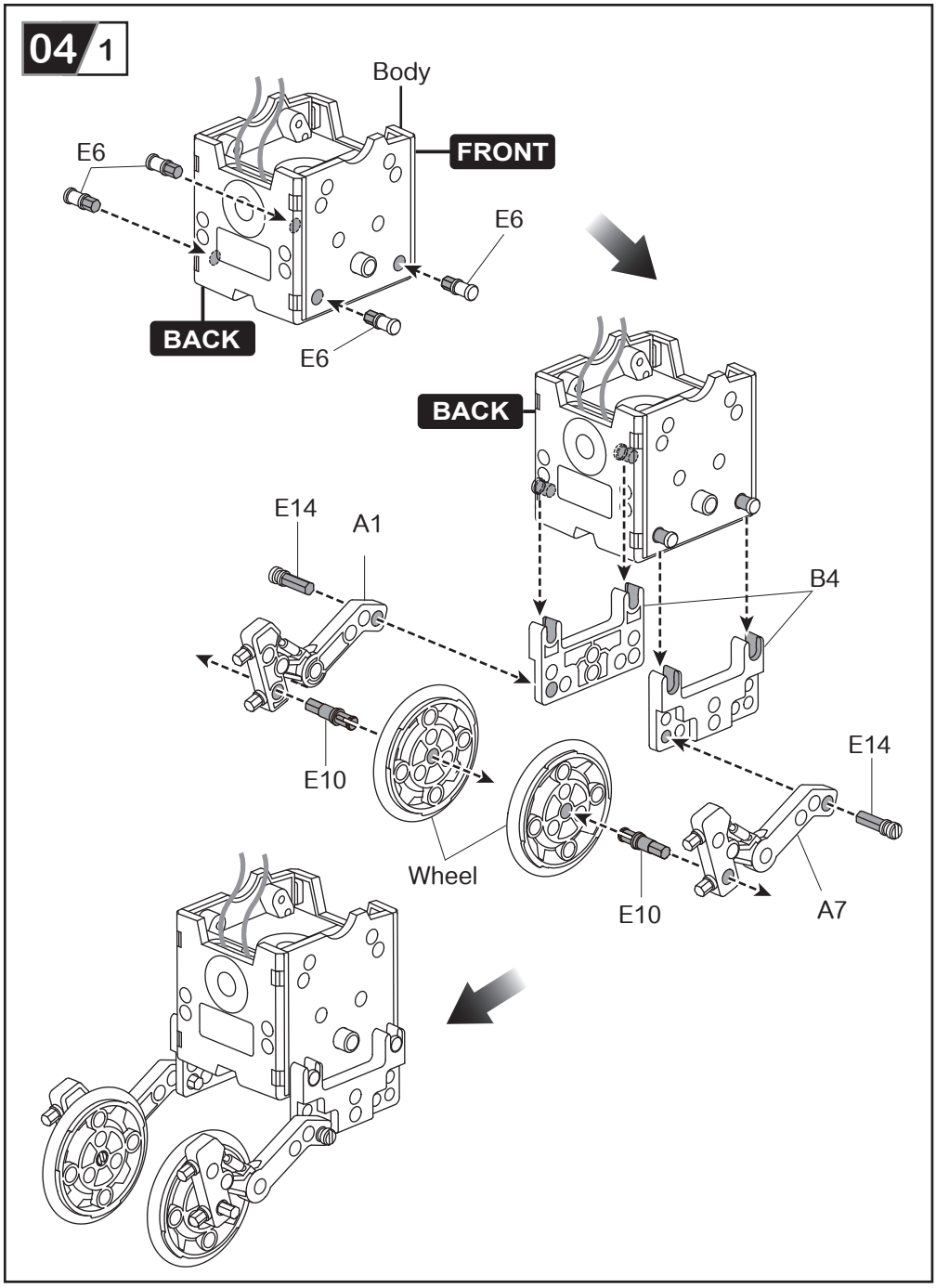
04 1
Body
FRONT
E6
E6
E6
BACK
BACK
E14
A1
B4
E10
E14
Wheel
E10
A7

04 2

02

03

O

X

04 3

Neck Angle

Head

Black

Red

❷

❷

❶

HEAD	BODY
⊕	RED
⊖	BLACK

Black

Red

05 Boat-bot Assembly

Level 1

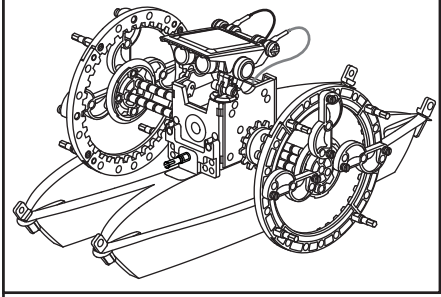

Prepare the below parts first before you assemble the “Boat-bot”.

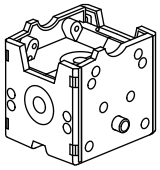

Body

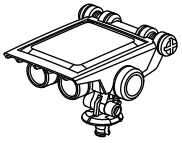

Head

Wheel x2

B1 x3

B2 x3

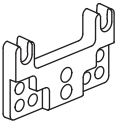

B4 x2

C6 x2

C1 x8

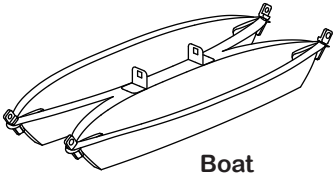

Boat

E6 x4

E14 x12

E4 x8

E9 x2

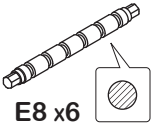

E8 x6

01

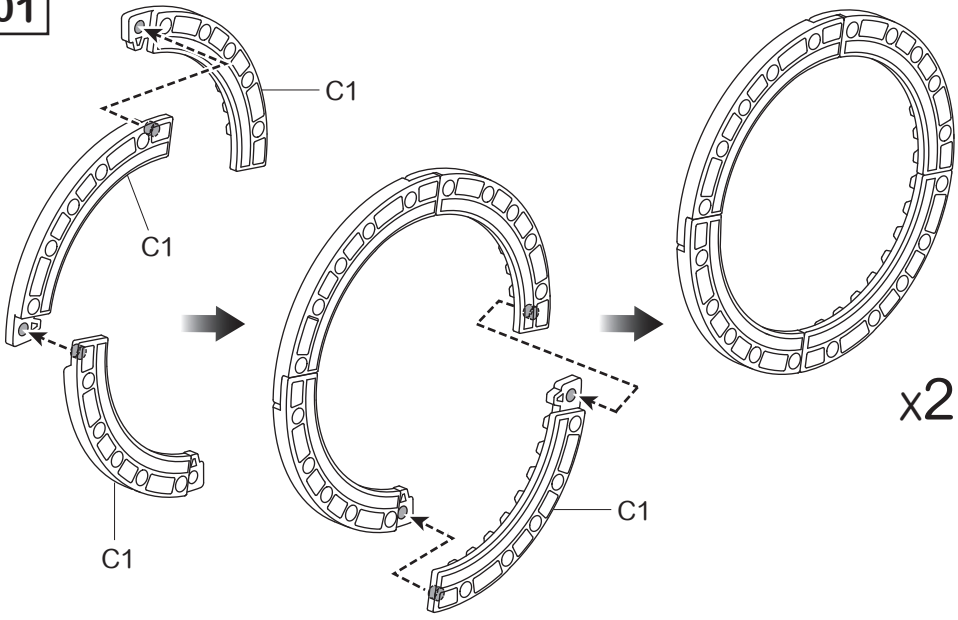

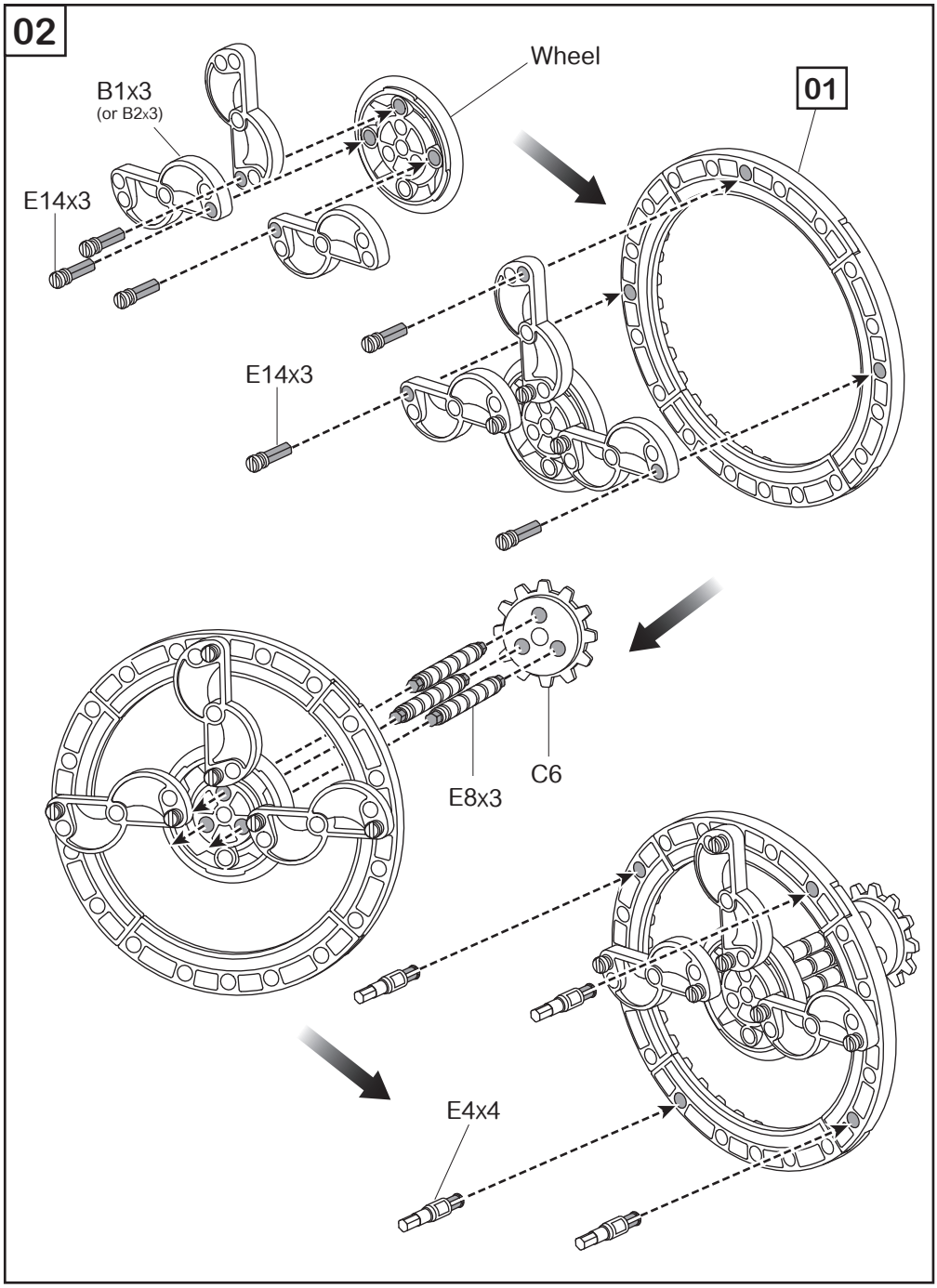
02
Wheel
01
B1x3
(or B2x3)
E14x3
E14x3
E8x3
C6
E4x4

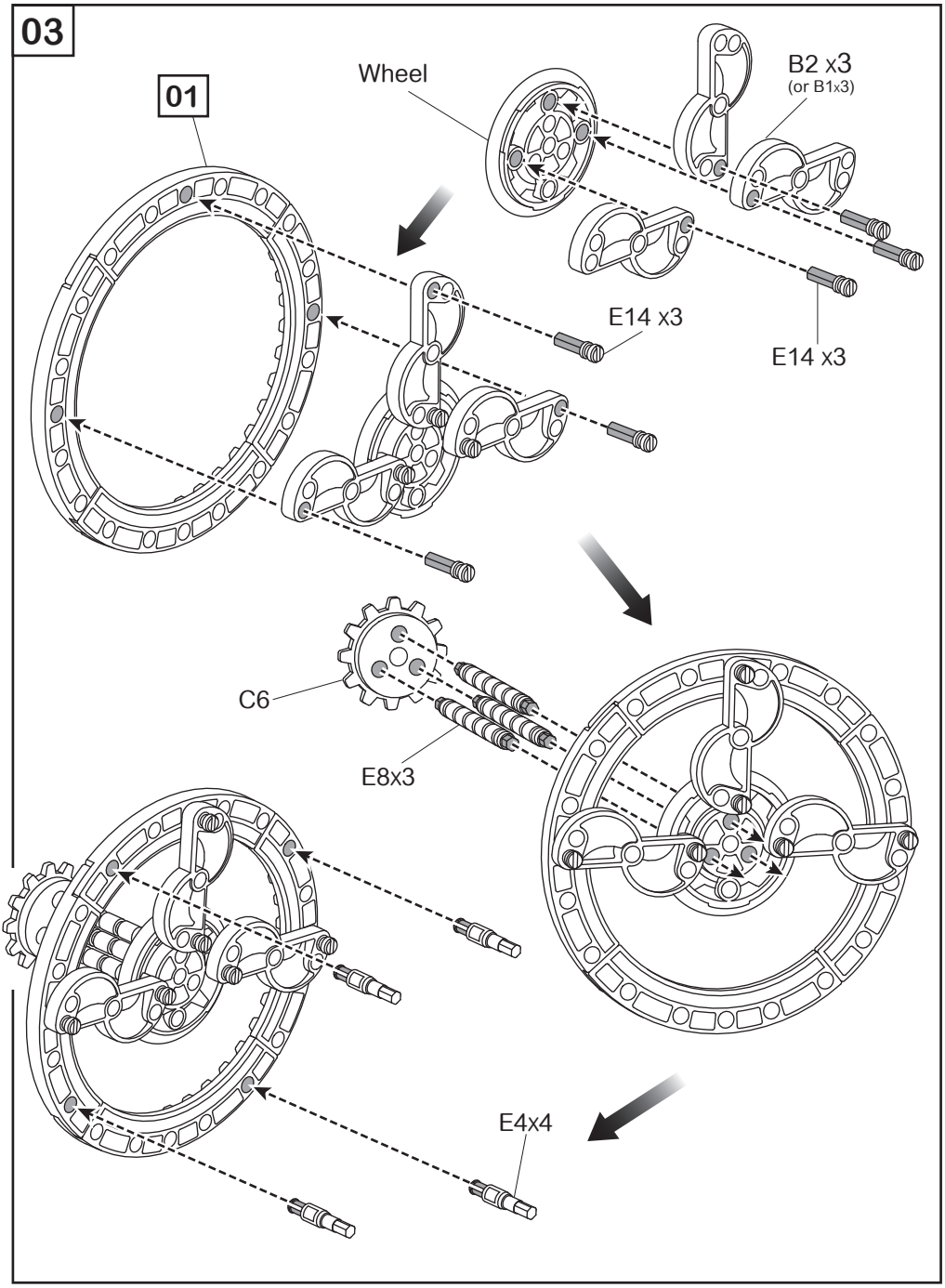
03
01
Wheel
B2 x3
(or B1x3)
E14 x3
E14 x3
C6
E8x3
E4x4

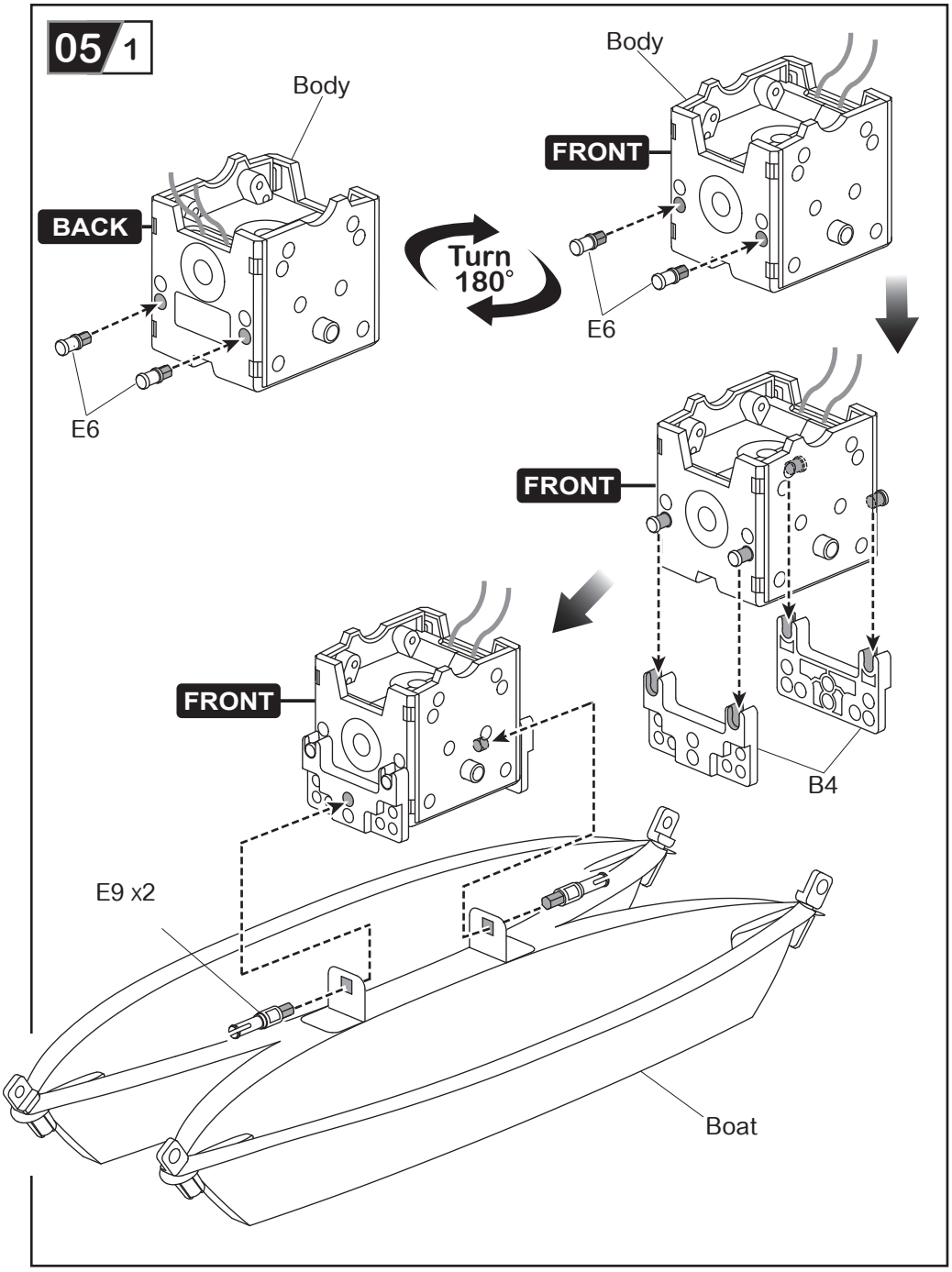
05 1
Body
BACK
E6
Turn 180°
Body
FRONT
E6
FRONT
B4
FRONT
E9 x2
Boat

05 2

02

FRONT

03

05 3

Neck Angle

Head

Black

Red

HEAD		BODY
⊕	⟷	RED
⊖	⟷	BLACK

Black

Red

06 Beetle-bot Assembly

Level 1

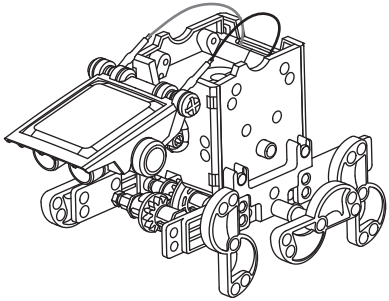

Prepare the below parts first before you assemble the "Beetle-bot".

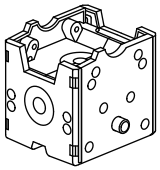

Body

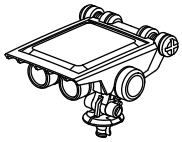

Head

B1 x3

B2 x3

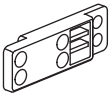

B3 x4

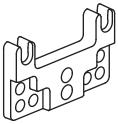

B4 x2

B8 x3

C2 x3

E6 x8

E11 x4

E12 x2

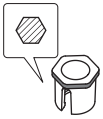

E7 x6

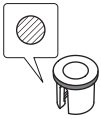

E1 x4

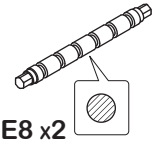

E8 x2

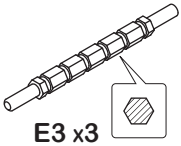

E3 x3

01

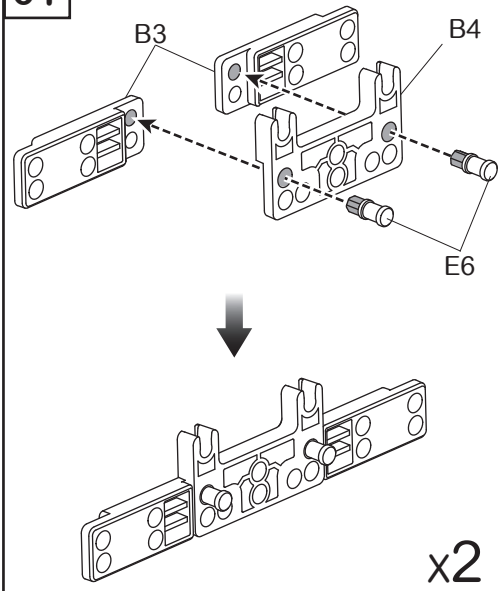

02

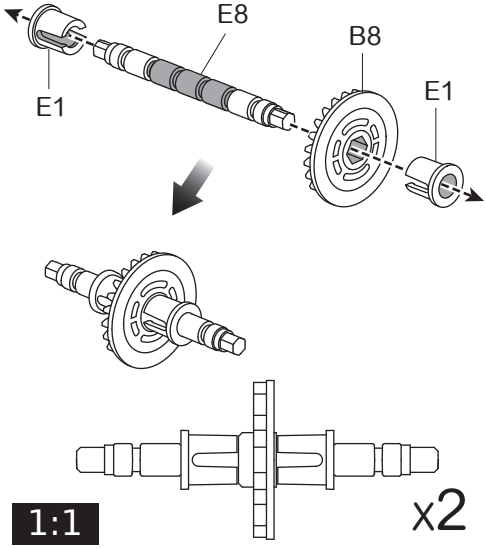

03

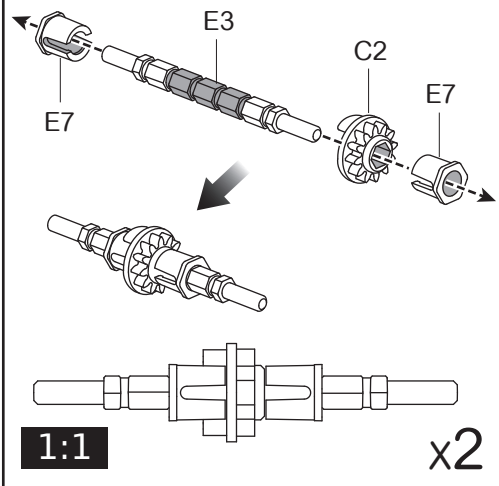

04

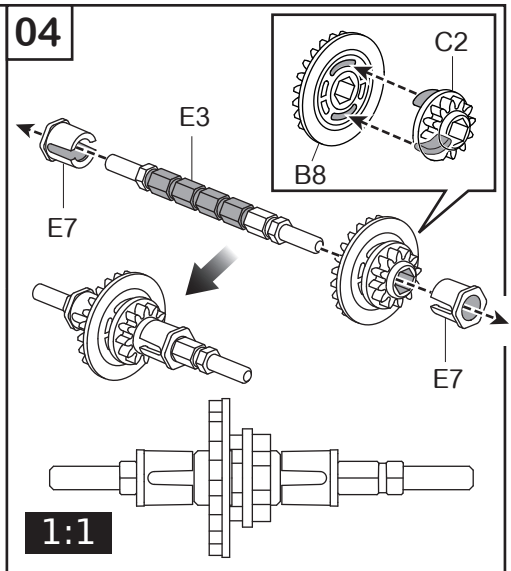

05

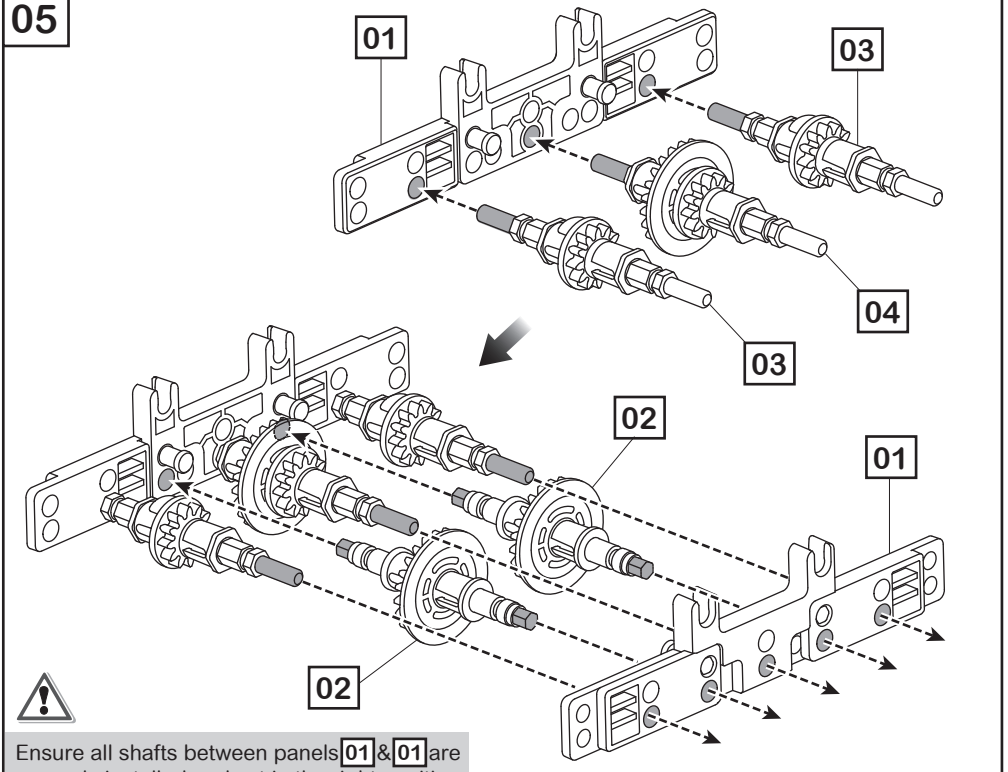

Ensure all shafts between panels 01 & 01 are properly installed and set in the right position.

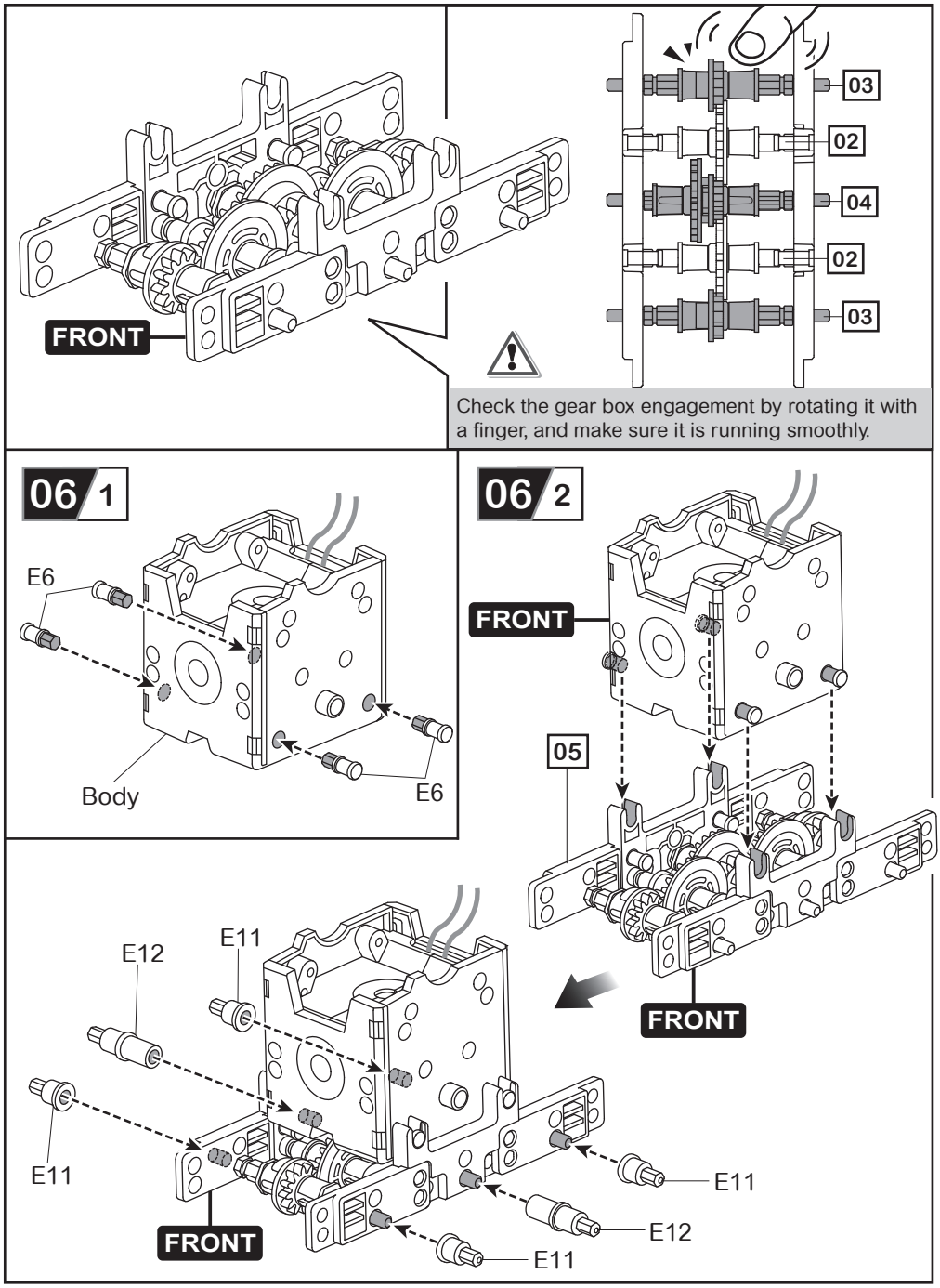
FRONT
03
02
04
02
03
Check the gear box engagement by rotating it with a finger, and make sure it is running smoothly.
06 1
E6
Body
E6
06 2
FRONT
05
FRONT
E12
E11
E11
FRONT
E11
E12
E11

06 3

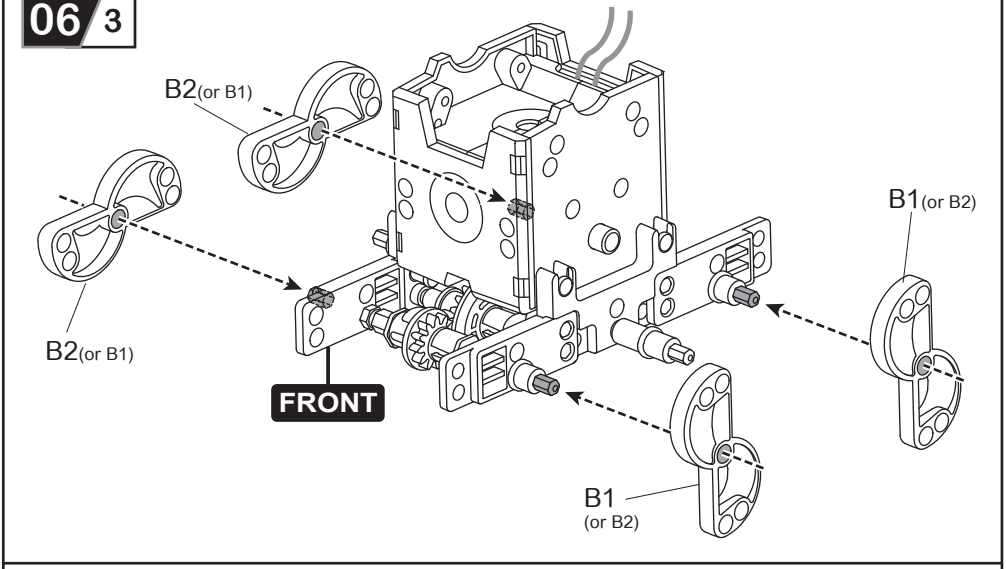
B2(or B1)
B2(or B1)
B1(or B2)
FRONT
B1
(or B2)

06 4

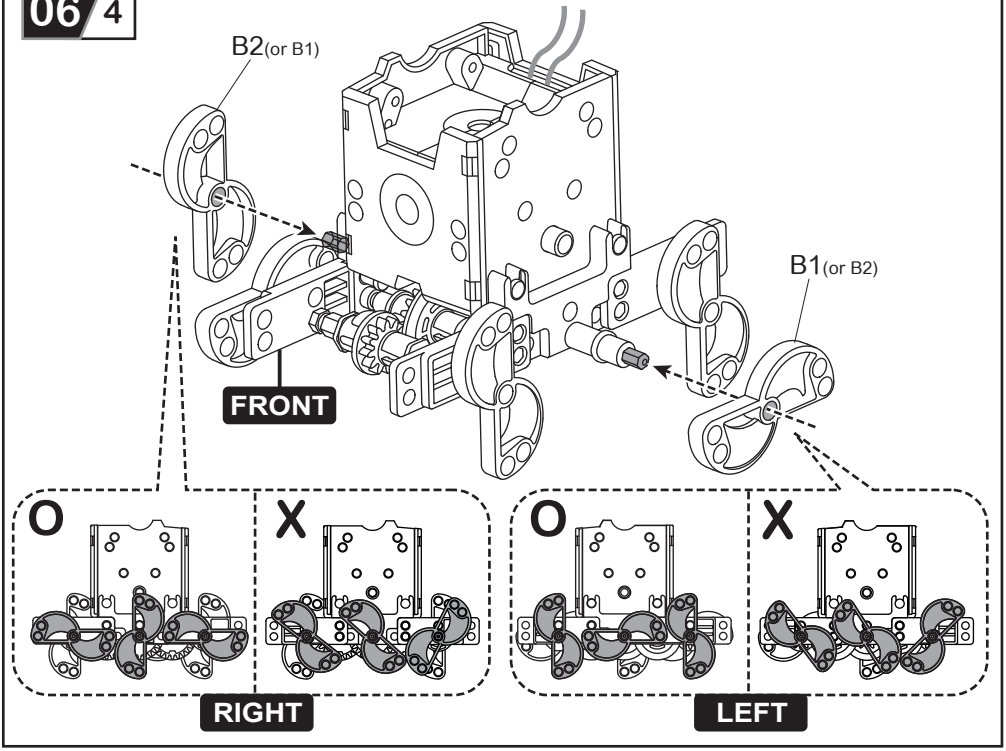
B2(or B1)
B1(or B2)
FRONT
O
X
O
X
RIGHT
LEFT

06/5

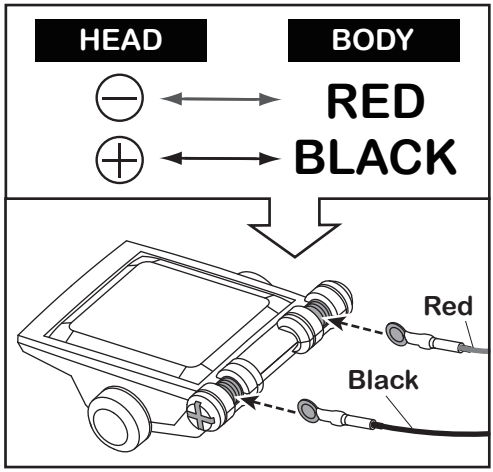

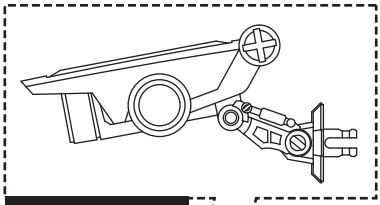

Neck Angle

Red

Black

2

2

Head

1

07 Dog-bot Assembly

Level 1

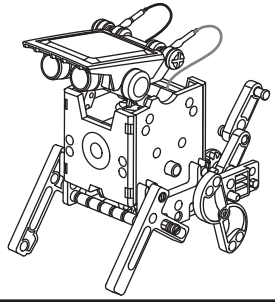

Prepare the below parts first before you assemble the "Dog-bot".

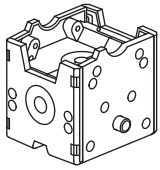

Body

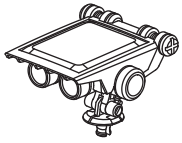

Head

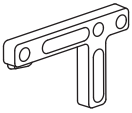

A2 x1

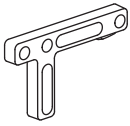

A8 x1

B1 x1

B2 x1

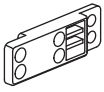

B3 x2

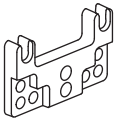

B4 x2

B5 x2

B7 x1

B8 x2

C2 x3

E6 x5

E14 x3

E10 x2

E11 x2

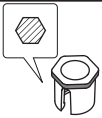

E7 x4

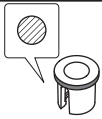

E1 x4

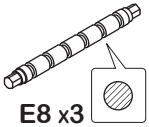

E8 x3

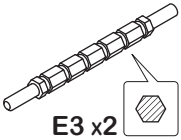

E3 x2

01

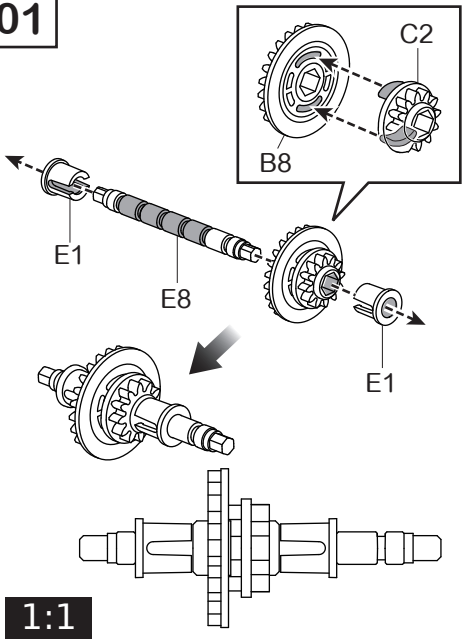

02

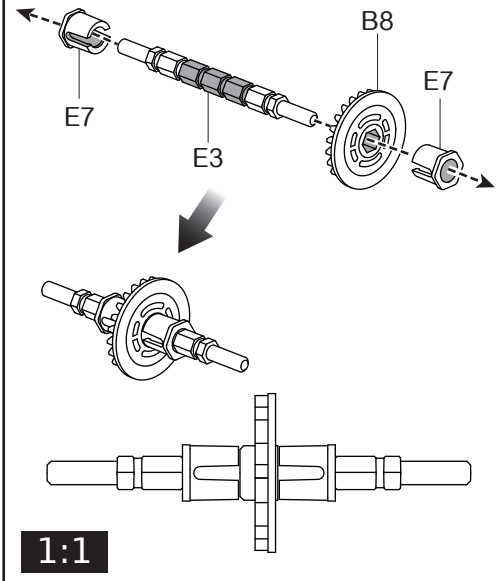

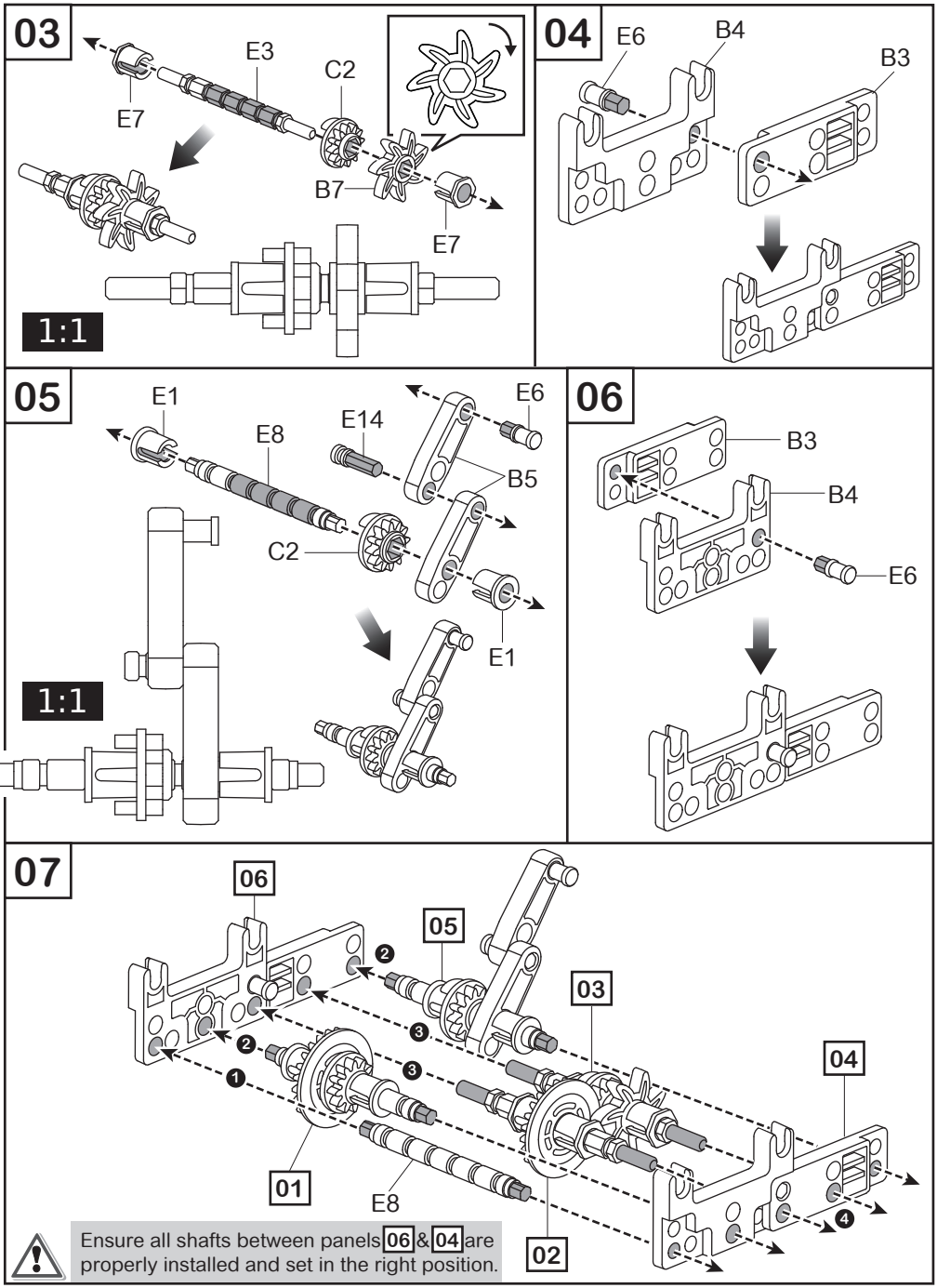
03
E7
E3
C2
B7
E7
1:1
04
E6
B4
B3
05
E1
E8
E14
E6
B5
C2
E1
1:1
06
B3
B4
E6
07
06
05
03
04
01
E8
02
Ensure all shafts between panels 06 & 04 are properly installed and set in the right position.

Check the gear box engagement by rotating it with a finger, and make sure it is running smoothly.

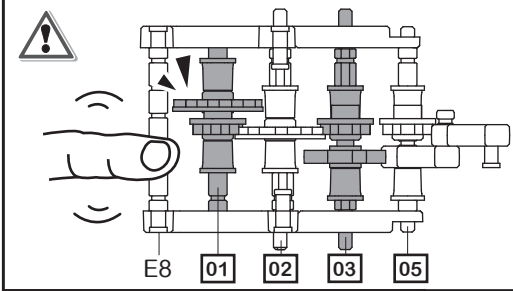

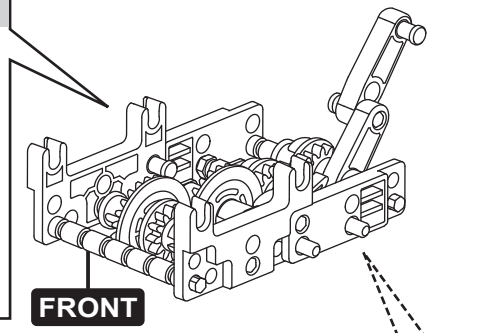

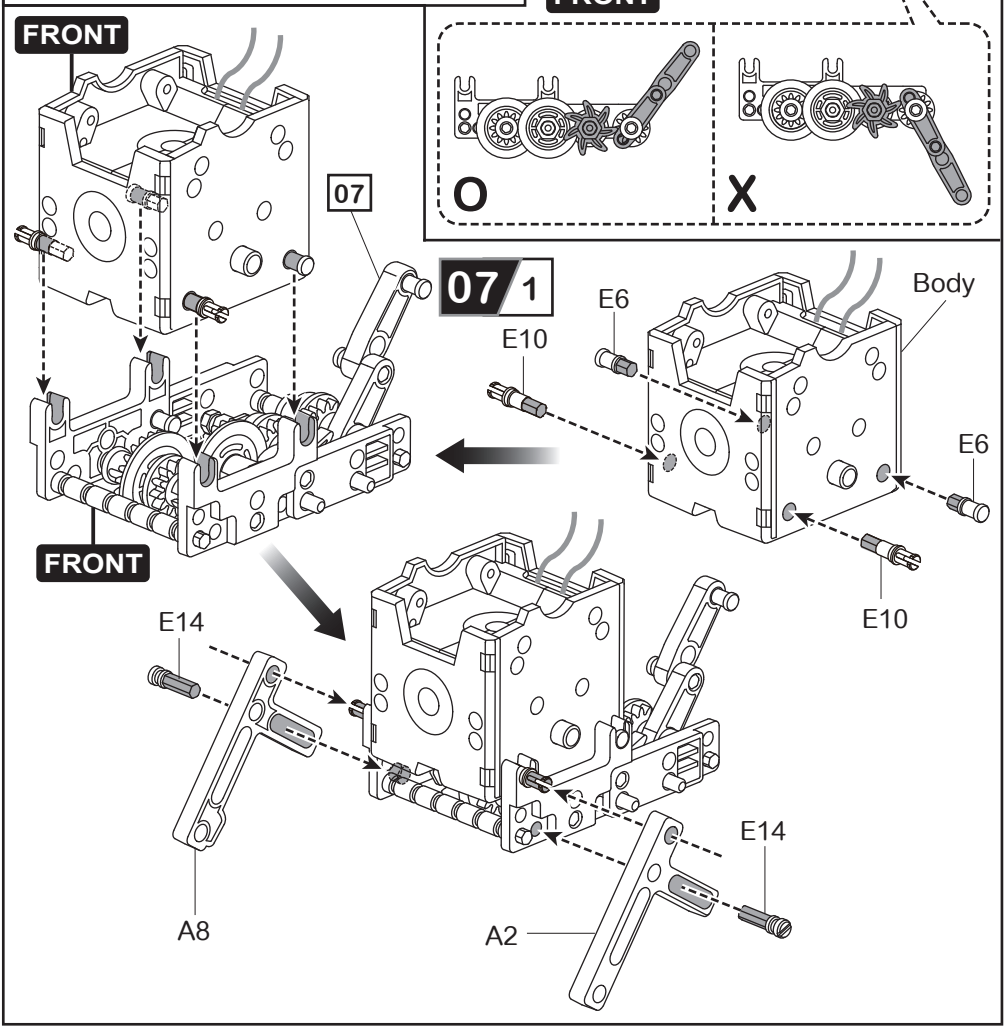

07 2

B2 (or B1)

E11

E11

B1
(or B2)

movement 1 :
shaking & wagging tail!

movement 2 :
jumping & wagging tail!

07 3

Black

Red

Head

Neck Angle

HEAD	BODY
⊕ ⟷	RED
⊖ ⟷	BLACK

Black

Red

08 Auto-bot Assembly

Level 2

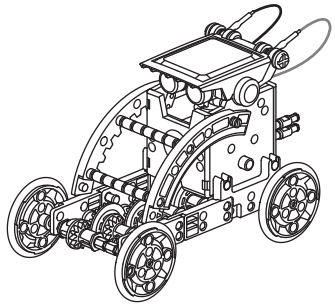

Prepare the below parts first before you assemble the "Auto-bot".

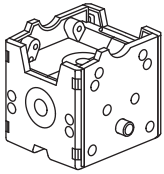

Body

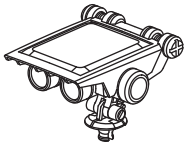

Head

Wheel x4

B3 x4

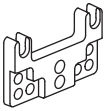

B4 x2

B8 x4

C1 x2

C2 x4

E6 x8

E14 x2

E4 x4

E11 x4

E7 x2

E1 x10

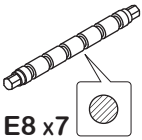

E8 x7

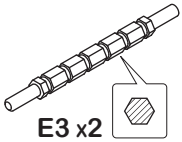

E3 x2

01

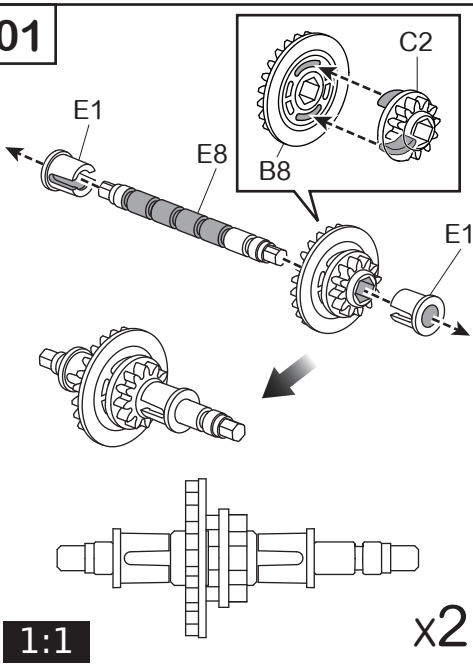

02

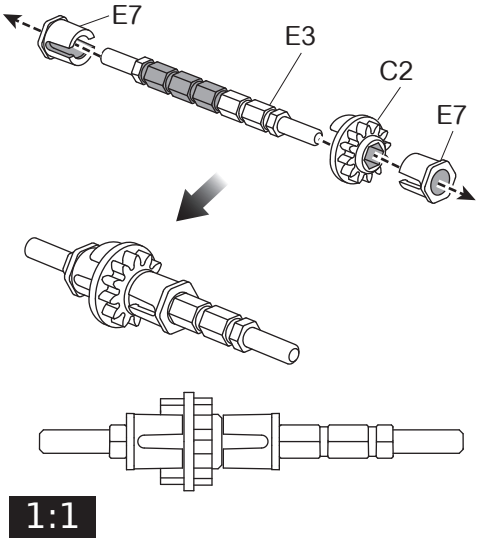

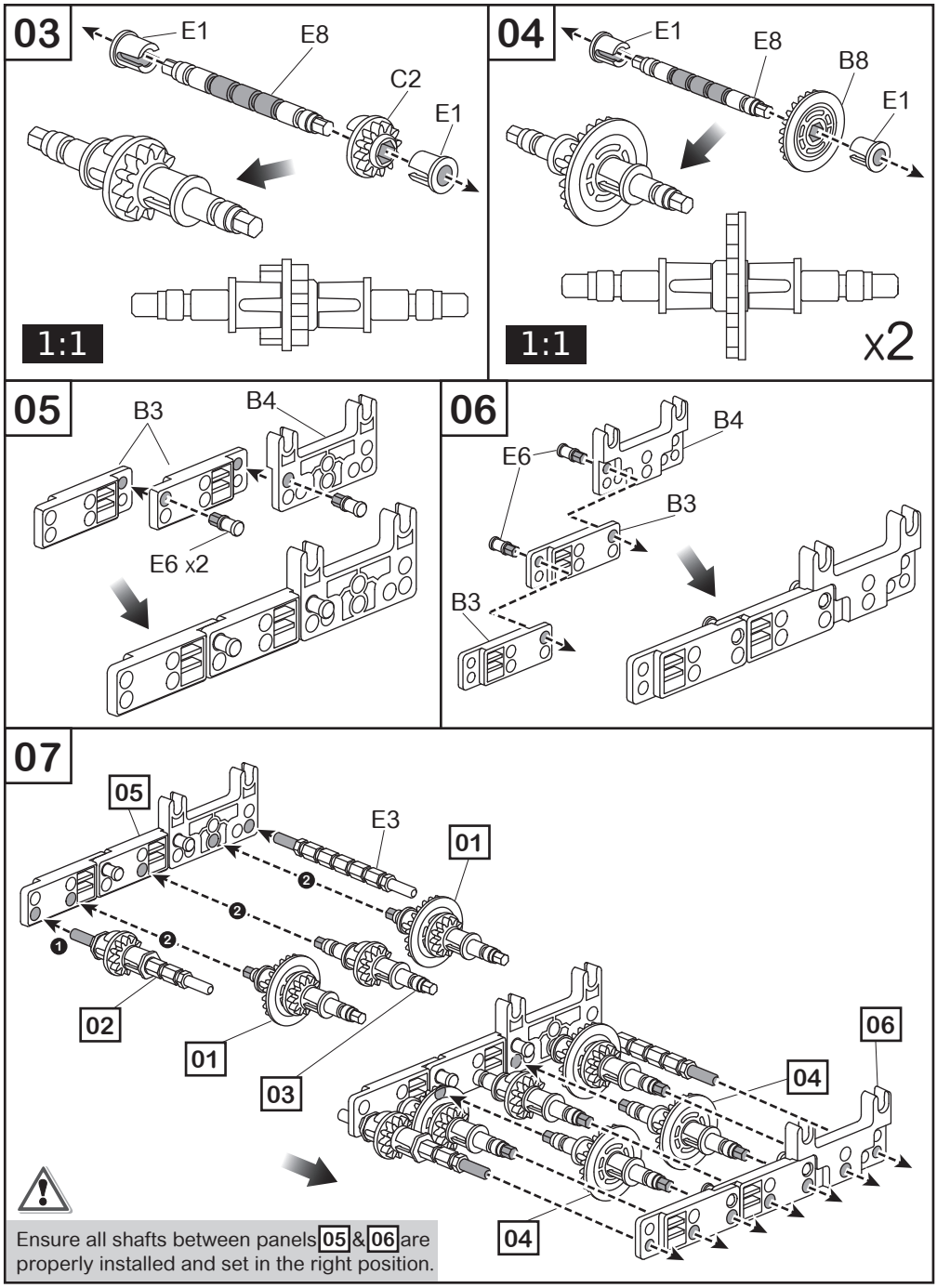
03
E1
E8
C2
E1
1:1
04
E1
E8
B8
E1
1:1
x2
05
B3
B4
E6 x2
06
E6
B4
B3
B3
07
05
E3
01
02
01
03
06
04
04
Ensure all shafts between panels 05 & 06 are properly installed and set in the right position.

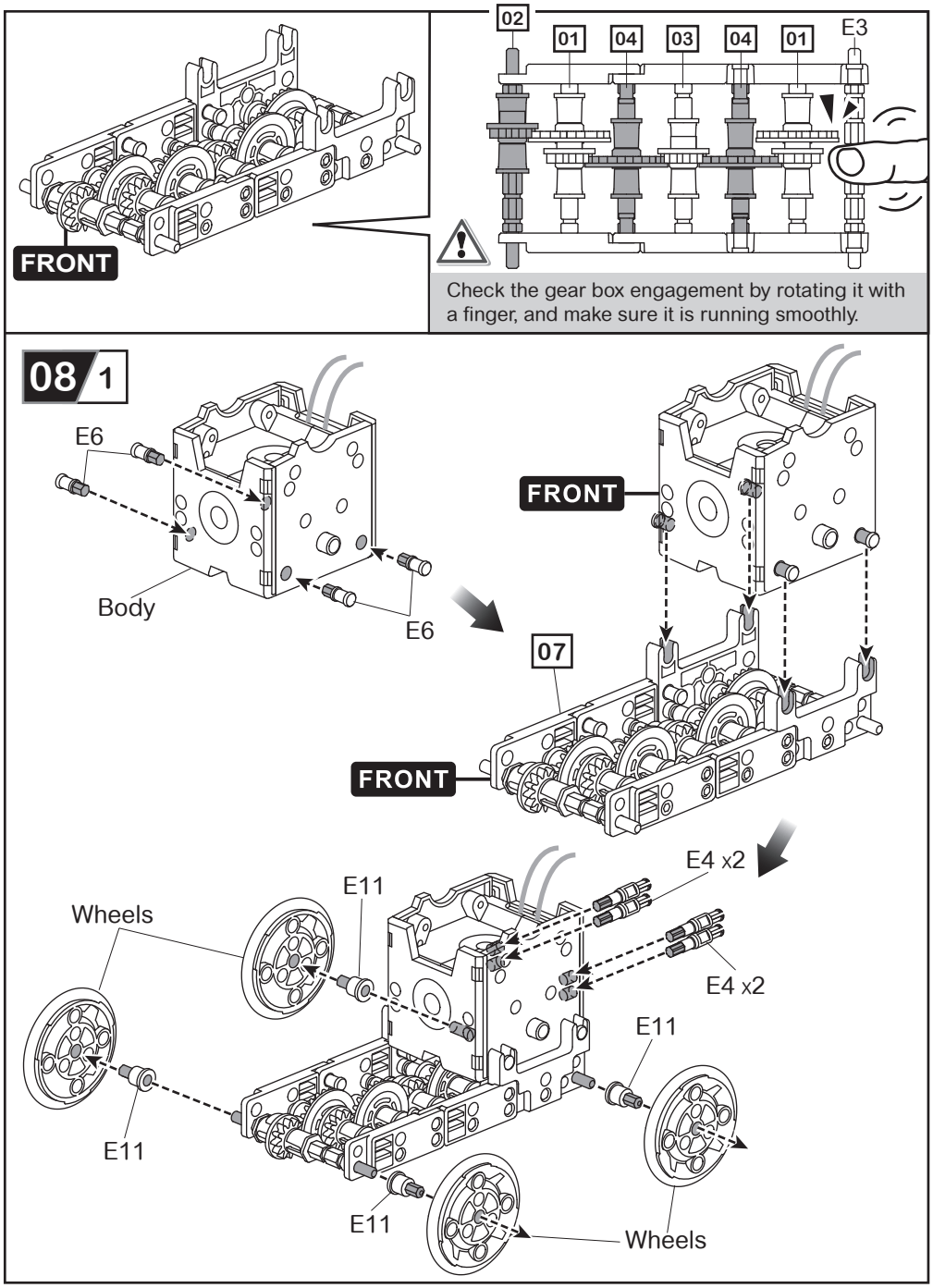
FRONT
02
01
04
03
04
01
E3
Check the gear box engagement by rotating it with a finger, and make sure it is running smoothly.
08 1
E6
Body
E6
FRONT
07
FRONT
E4 x2
E11
Wheels
E4 x2
E11
E11
E11
Wheels

08 2

E14

C1

E8

E14

C1

08 3

Black

Head

Red

Neck Angle

HEAD	BODY
⊕	RED
⊖	BLACK

Black

Red

09 Crab-bot Assembly

Level 2

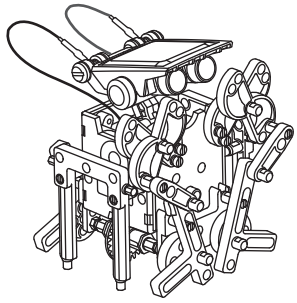

Prepare the below parts first before you assemble the "Crab-bot".

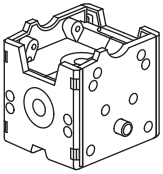

Body

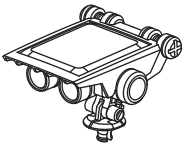

Head

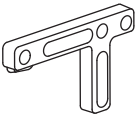

A2 x2

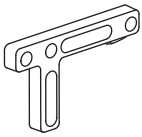

A8 x2

B1 x2

B2 x2

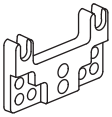

B4 x2

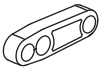

B5 x2

B8 x3

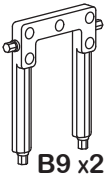

B9 x2

C2 x1

C7 x4

E14 x4

E5 x8

E4 x10

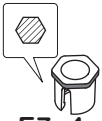

E7 x4

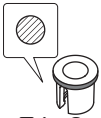

E1 x2

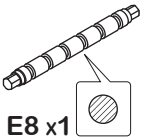

E8 x1

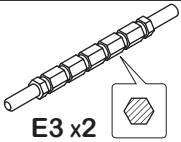

E3 x2

01

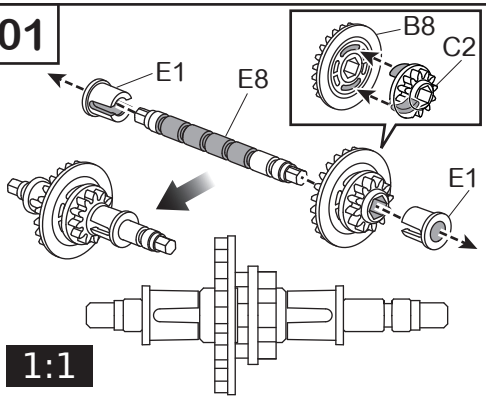

02

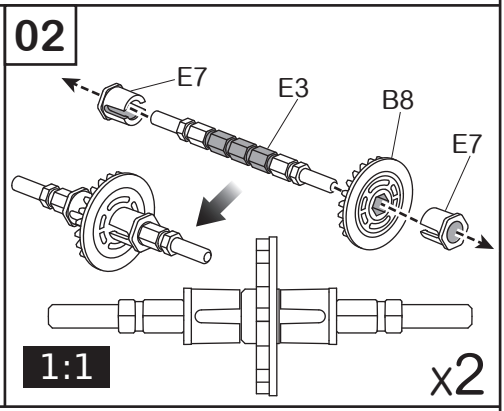

03

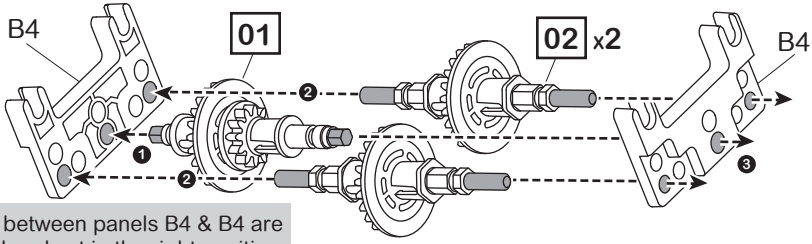

Ensure all shafts between panels B4 & B4 are properly installed and set in the right position.

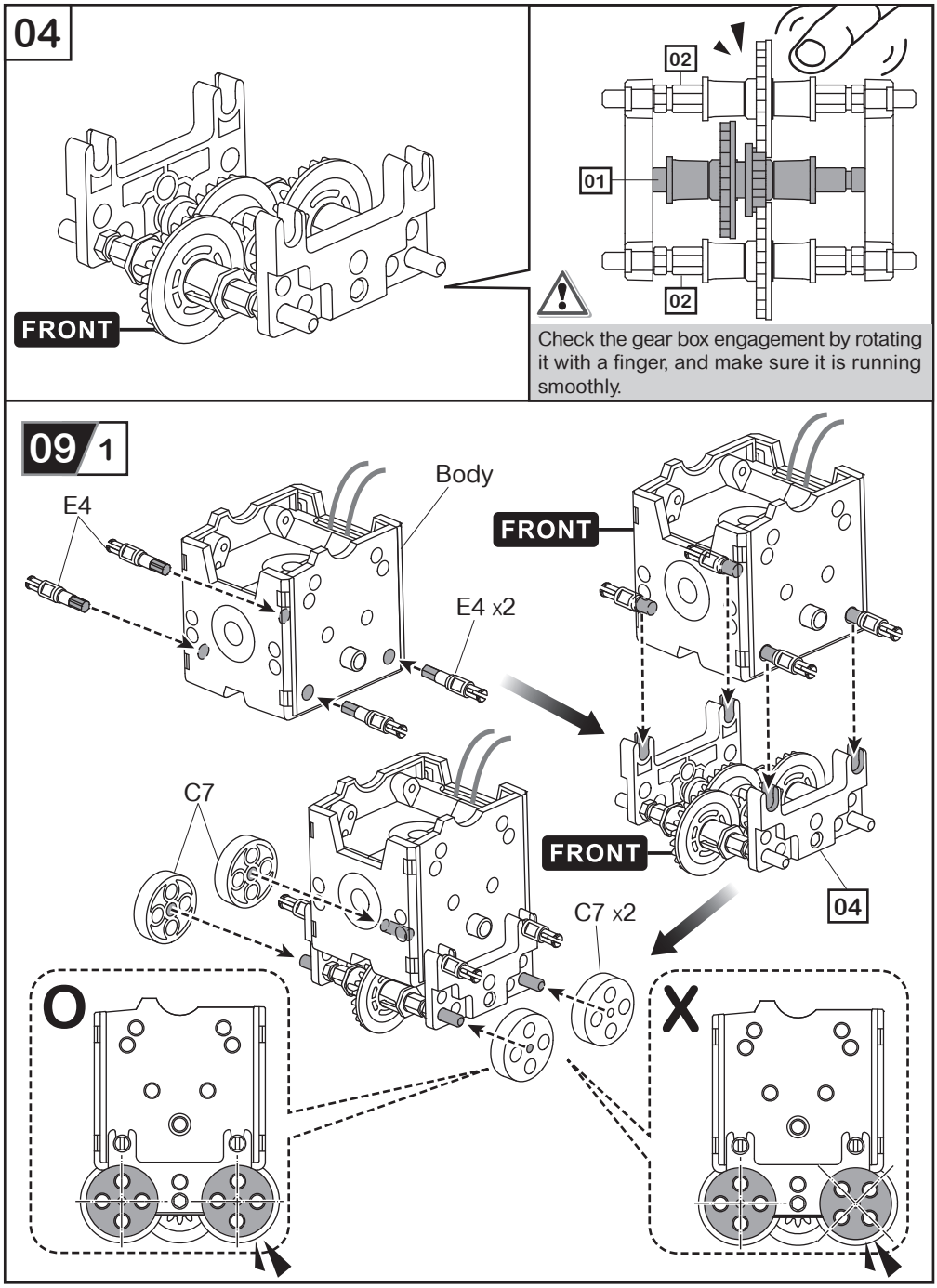
04
FRONT
02
01
02
Check the gear box engagement by rotating it with a finger, and make sure it is running smoothly.
09 1
Body
E4
E4 x2
FRONT
C7
FRONT
04
C7 x2
O
X

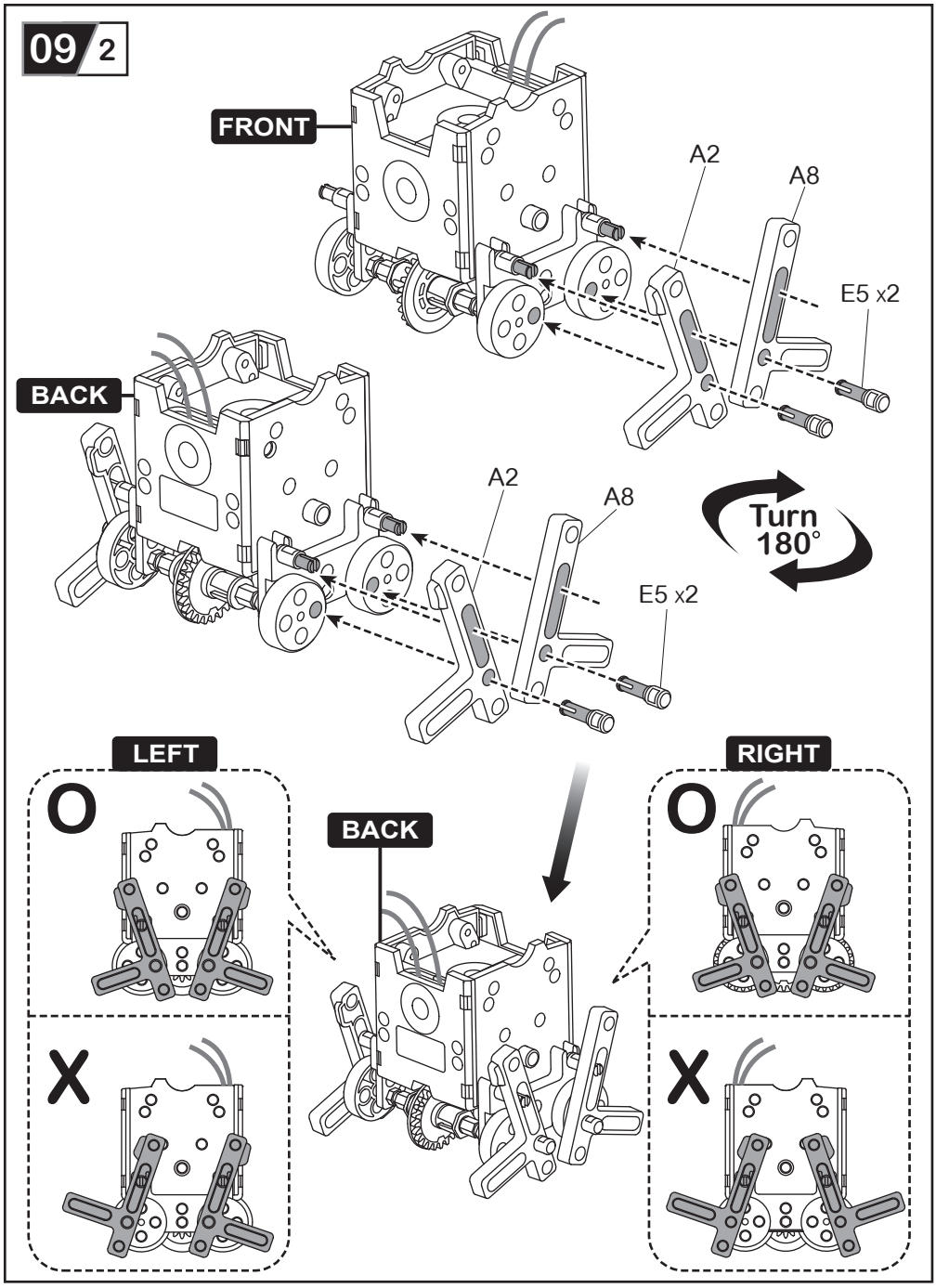
09 2
FRONT
A2
A8
E5 x2
BACK
A2
A8
Turn 180°
E5 x2
LEFT
O
X
BACK
RIGHT
O
X

09 3

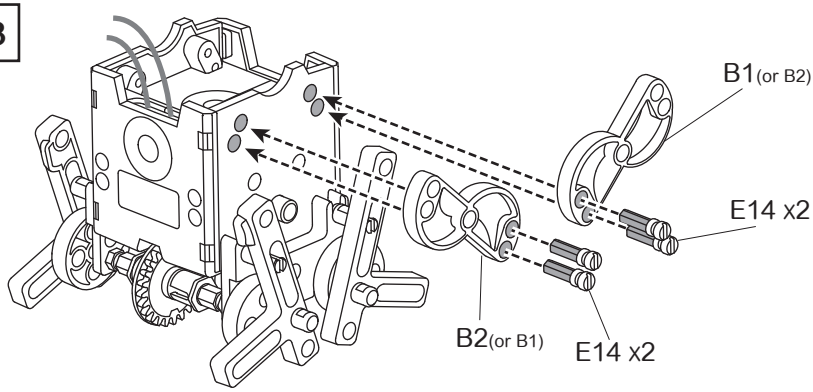

09 4

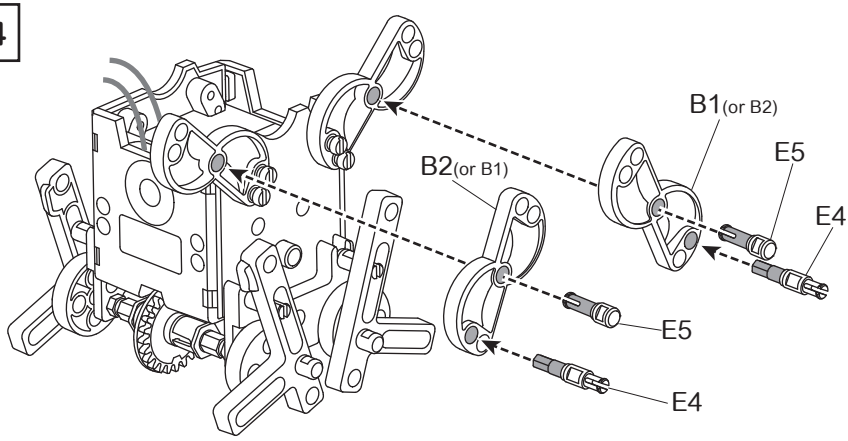

09 5

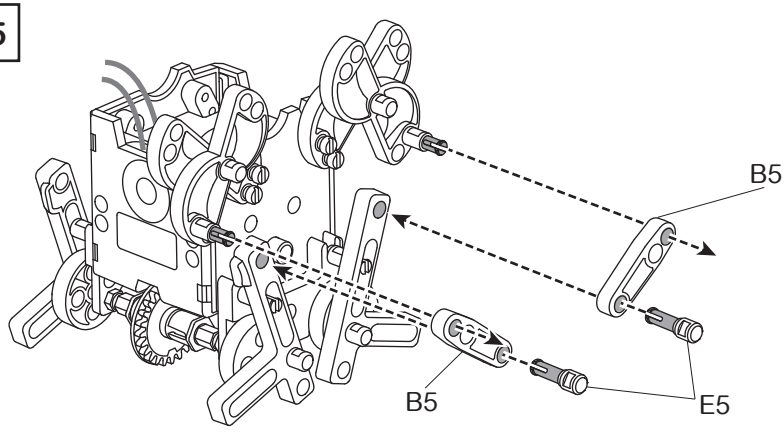

09 / 6

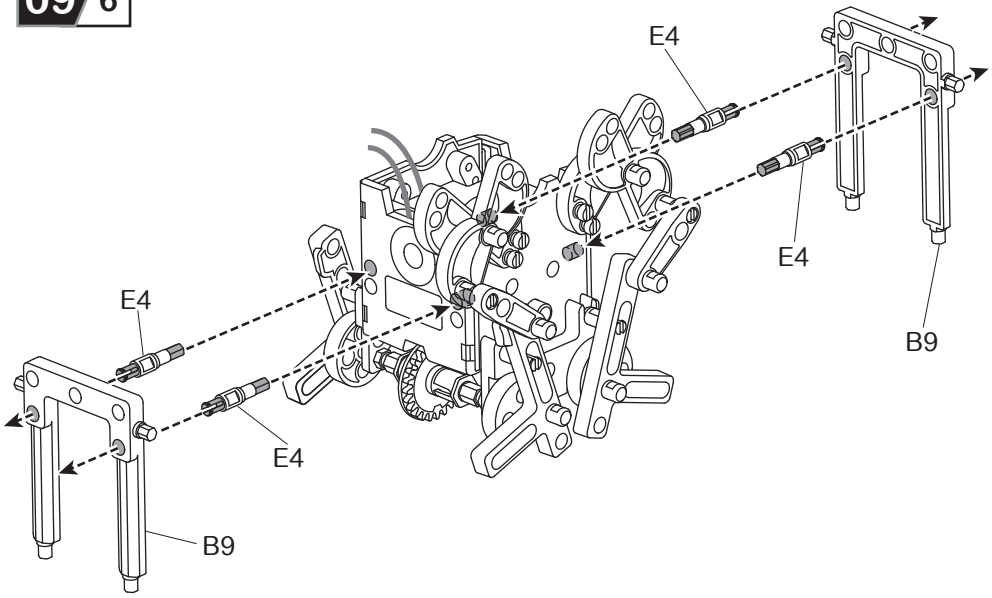
E4
E4
E4
E4
B9
B9

09 / 7

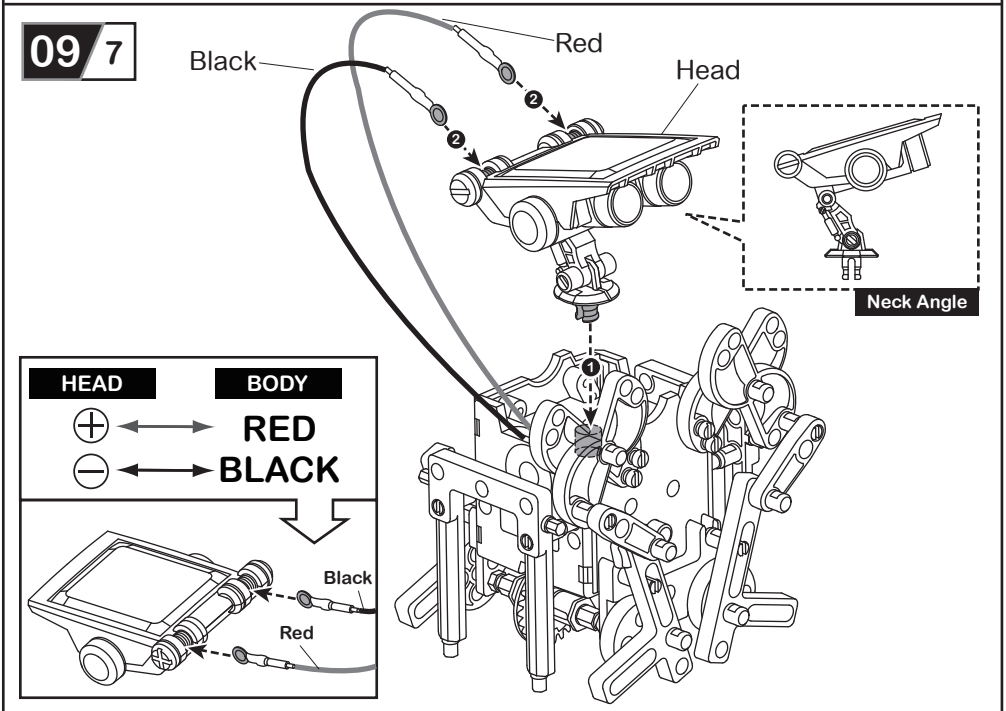
Black
Red
Head
Neck Angle
HEAD
BODY
RED
BLACK
Black
Red

10 Slither-bot Assembly

Level 2

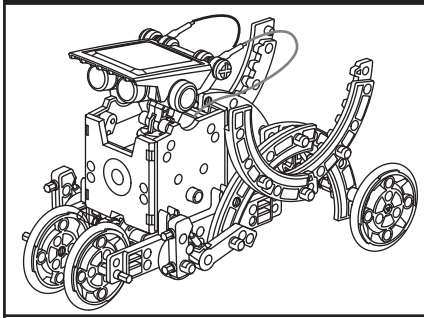

Prepare the below parts first before you assemble the “Slither-bot”.

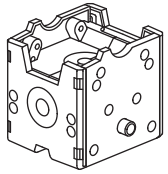

Body

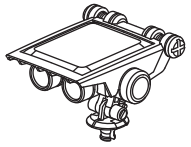

Head

Wheel x4

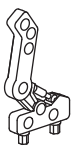

A1 x1

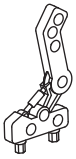

A7 x1

B3 x4

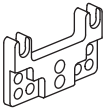

B4 x2

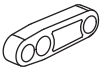

B5 x1

B8 x2

B7 x1

C2 x1

C1 x8

C6 x1

C7 x2

E6 x6

E5 x12

E10 x4

E9 x1

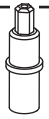

E12 x2

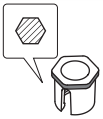

E7 x4

E1 x6

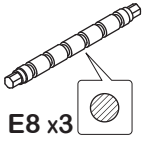

E8 x3

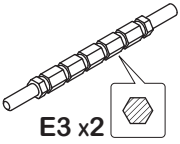

E3 x2

01

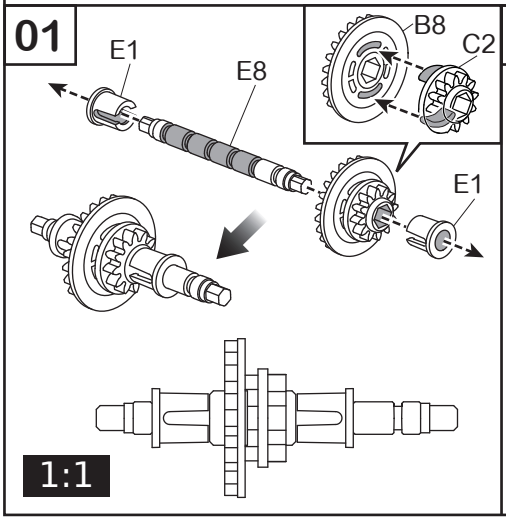

02

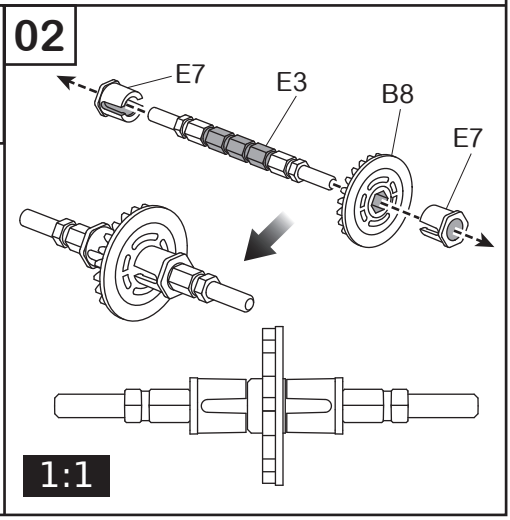

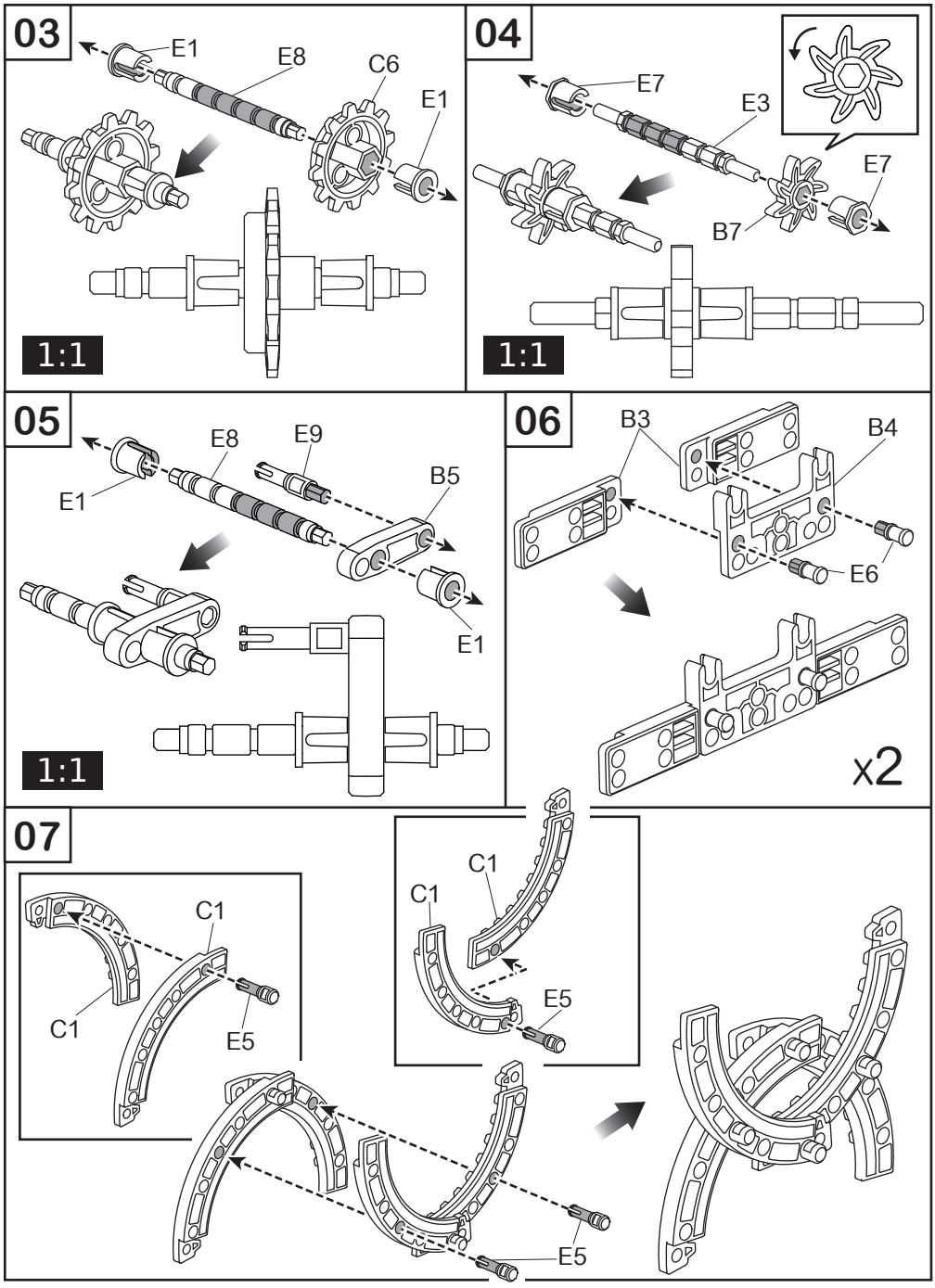
03
E1
E8
C6
E1
1:1
04
E7
E3
E7
B7
1:1
05
E8
E9
E1
B5
E1
1:1
06
B3
B4
E6
x2
07
C1
C1
E5
C1
C1
E5
E5

08

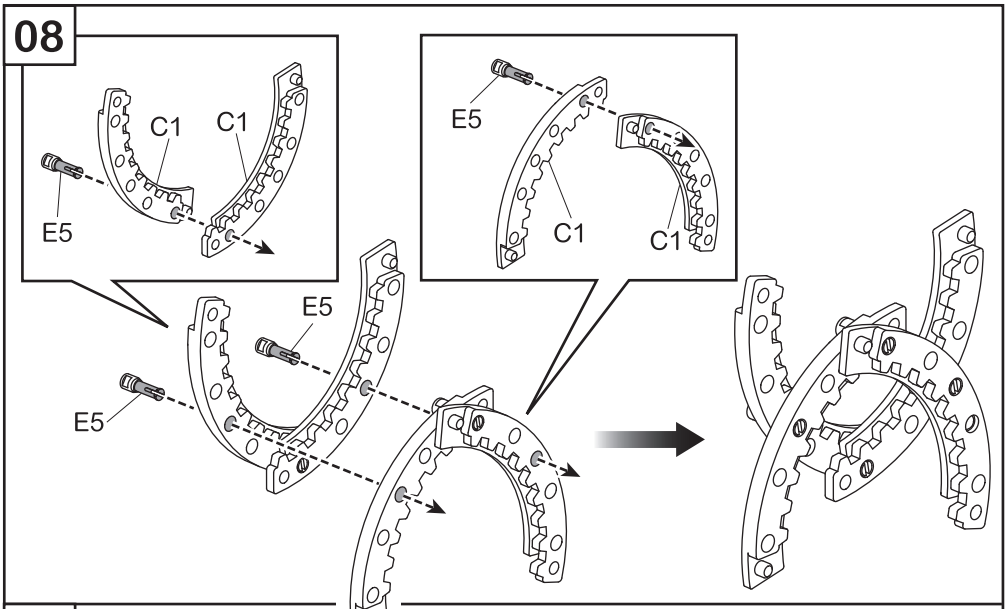

09

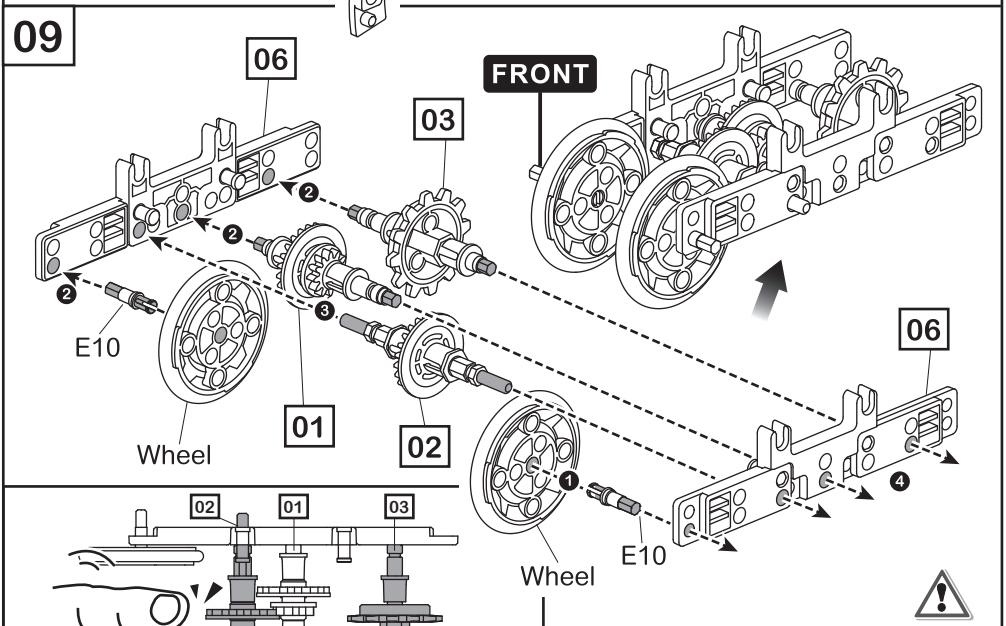

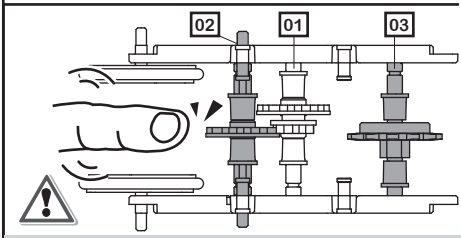

Check the gear box engagement by rotating it with a finger, and make sure it is running smoothly.

Ensure all shafts between panels 06 & 06 are properly installed and set in the right position.

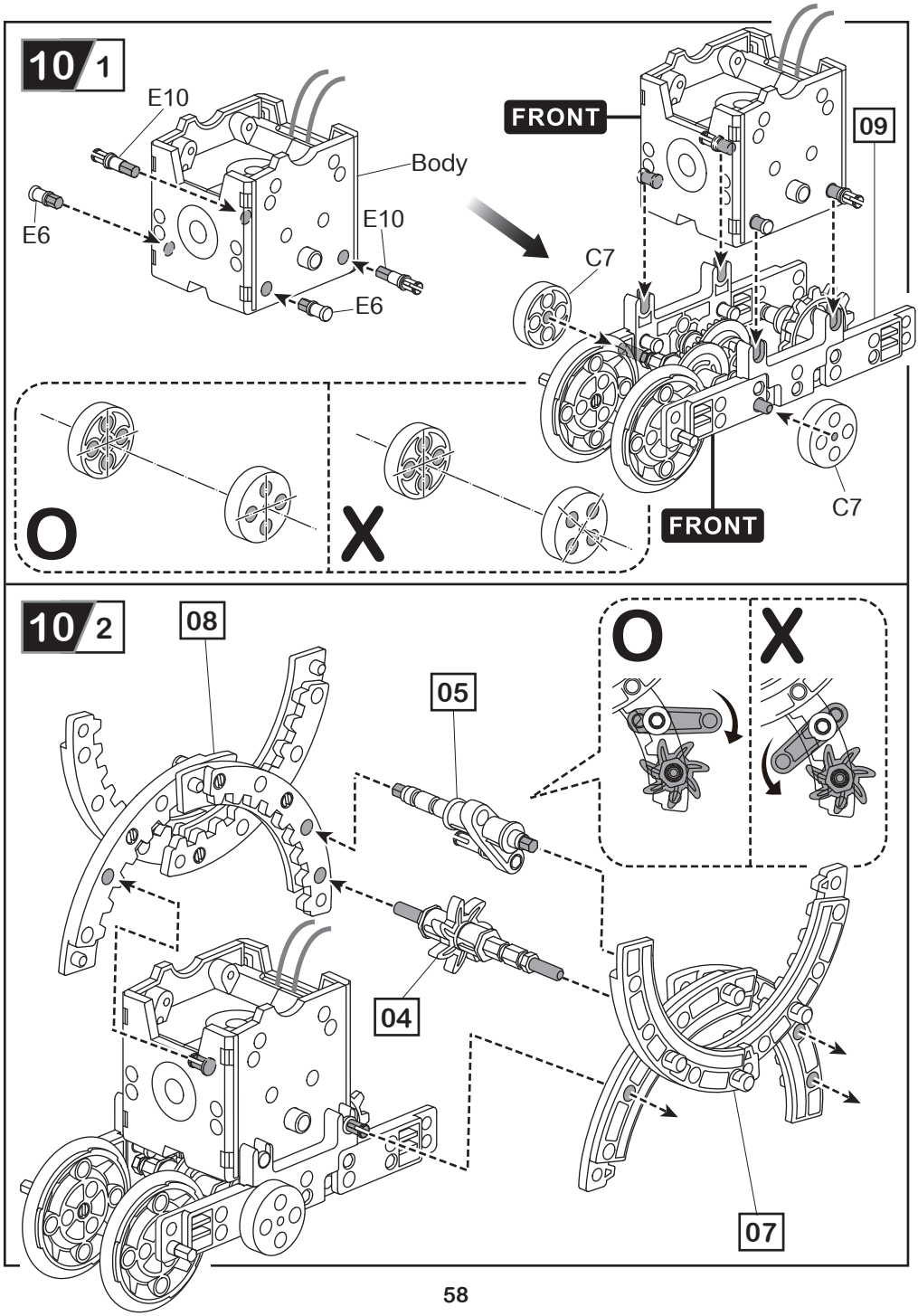
10 1
E10
Body
E6
E10
E6
FRONT
09
C7
C7
FRONT
O
X
10 2
08
05
O
X
04
07

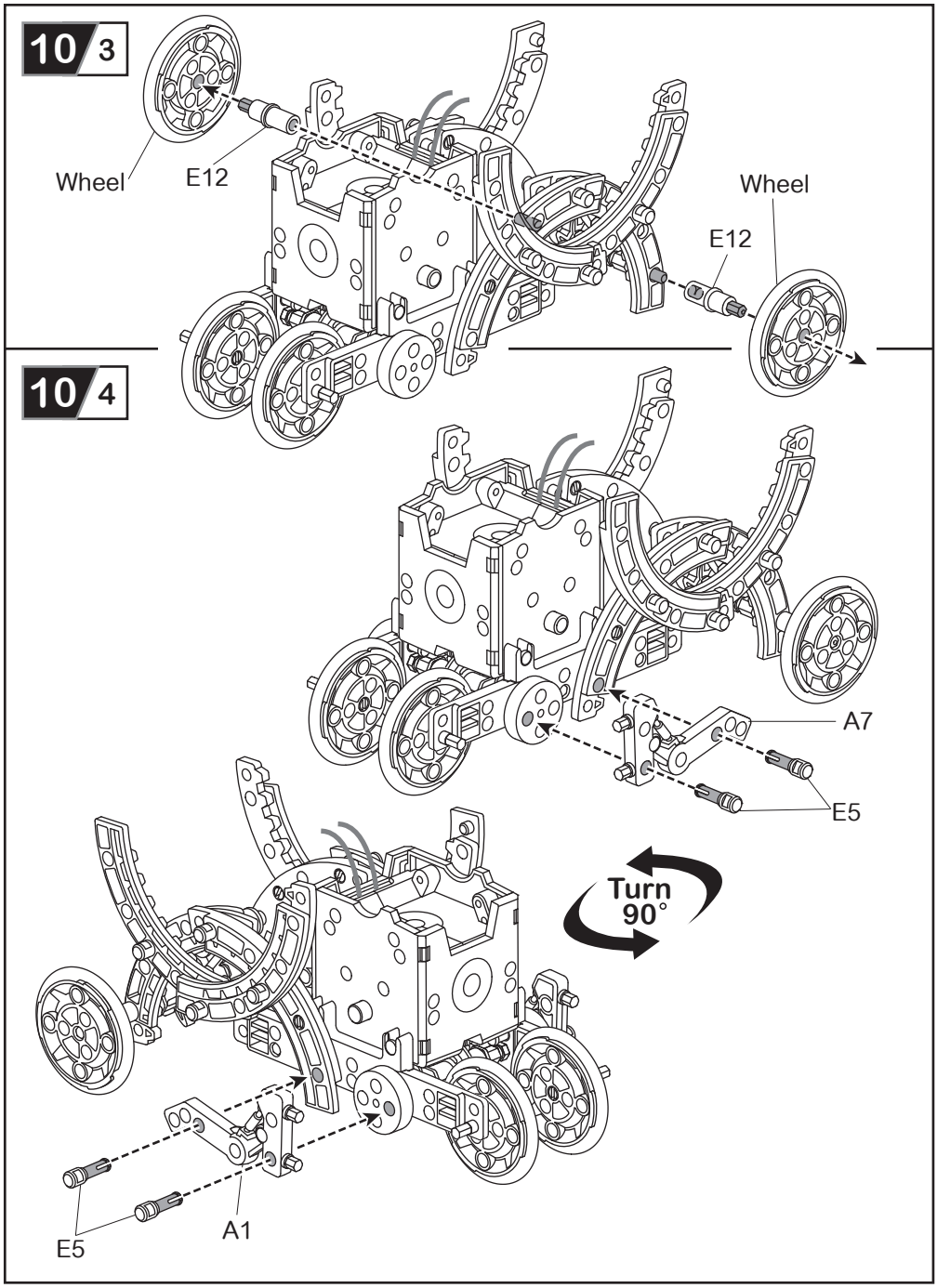
10 3
Wheel
E12
Wheel
E12
10 4
A7
E5
Turn
90°
E5
A1

10/5

Black

Red

Head

Neck Angle

HEAD	BODY
⊕	RED
⊖	BLACK

Black

Red

11 Roly poly-bot Assembly

Level 2

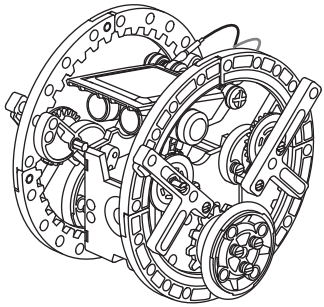

Prepare the below parts first before you assemble the “Roly poly-bot”.

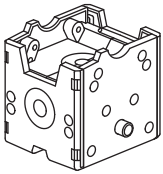

Body

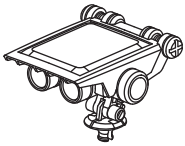

Head

Wheel x2

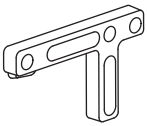

A2 x2

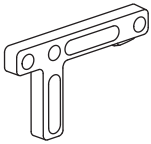

A8 x2

B1 x2

B2 x2

B8 x4

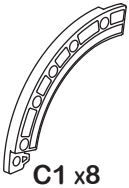

C1 x8

C6 x2

E14 x10

E4 x8

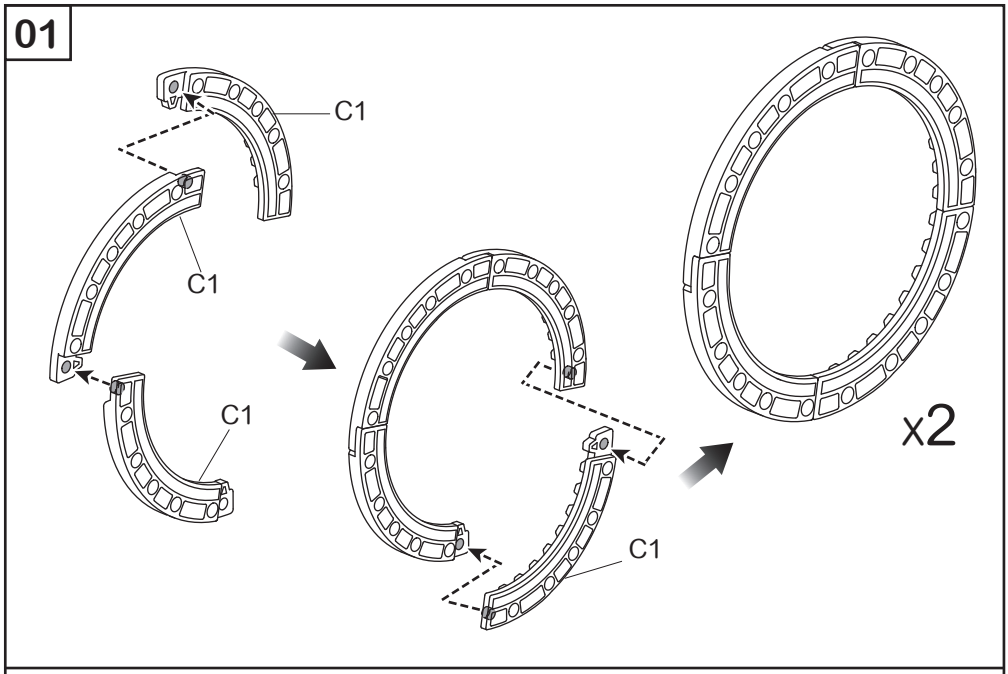
01
C1
C1
C1
C1
x2

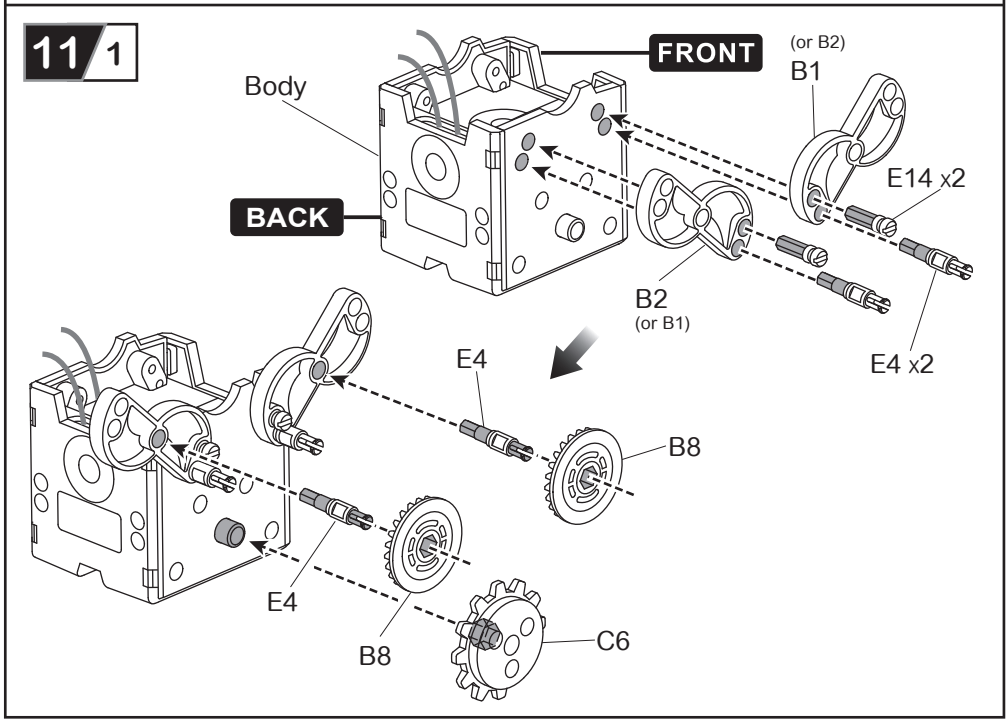
11 1
FRONT
(or B2)
B1
Body
E14 x2
BACK
B2
(or B1)
E4 x2
E4
B8
E4
B8
C6

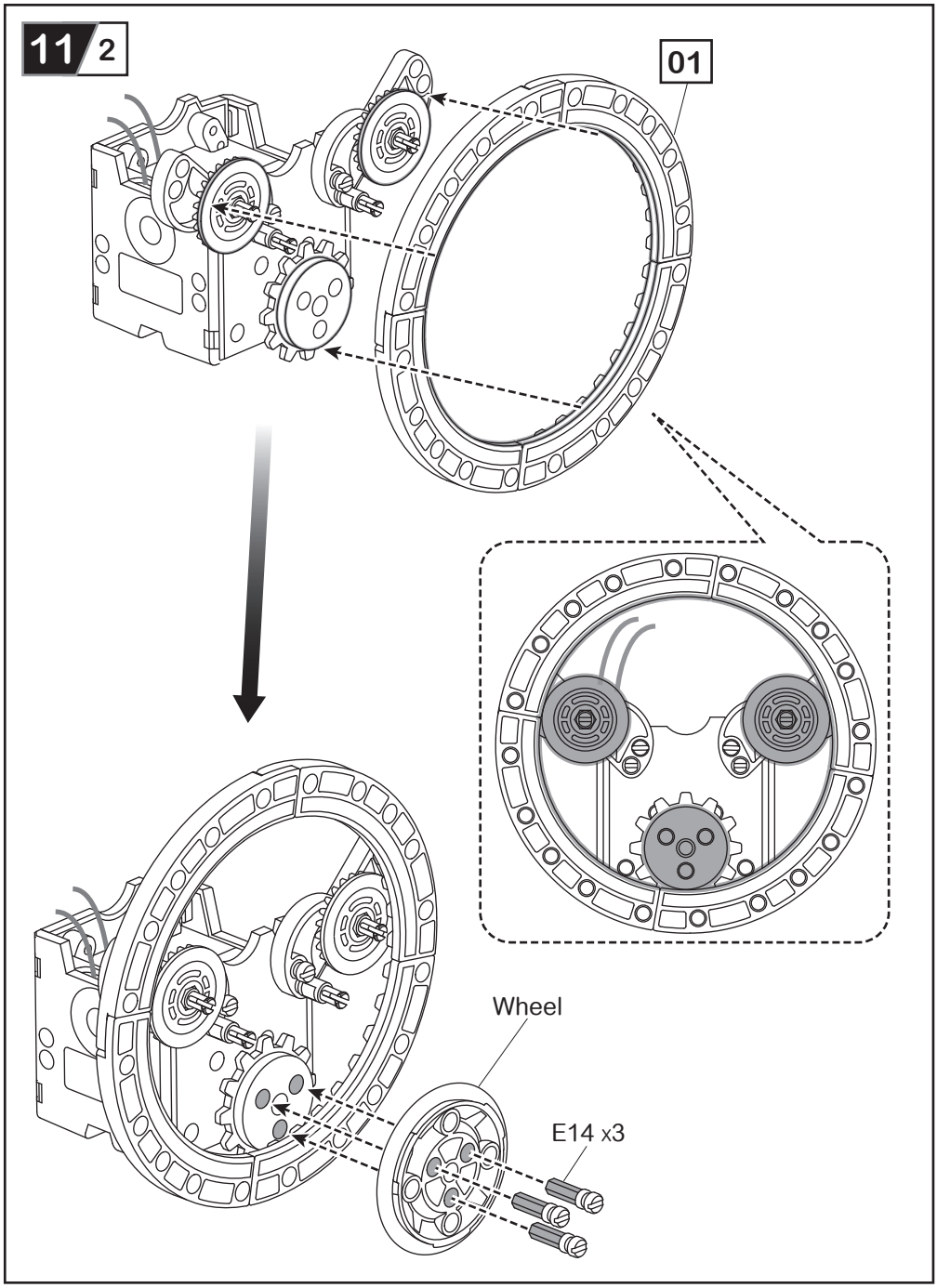
11/2
01
Wheel
E14 x3

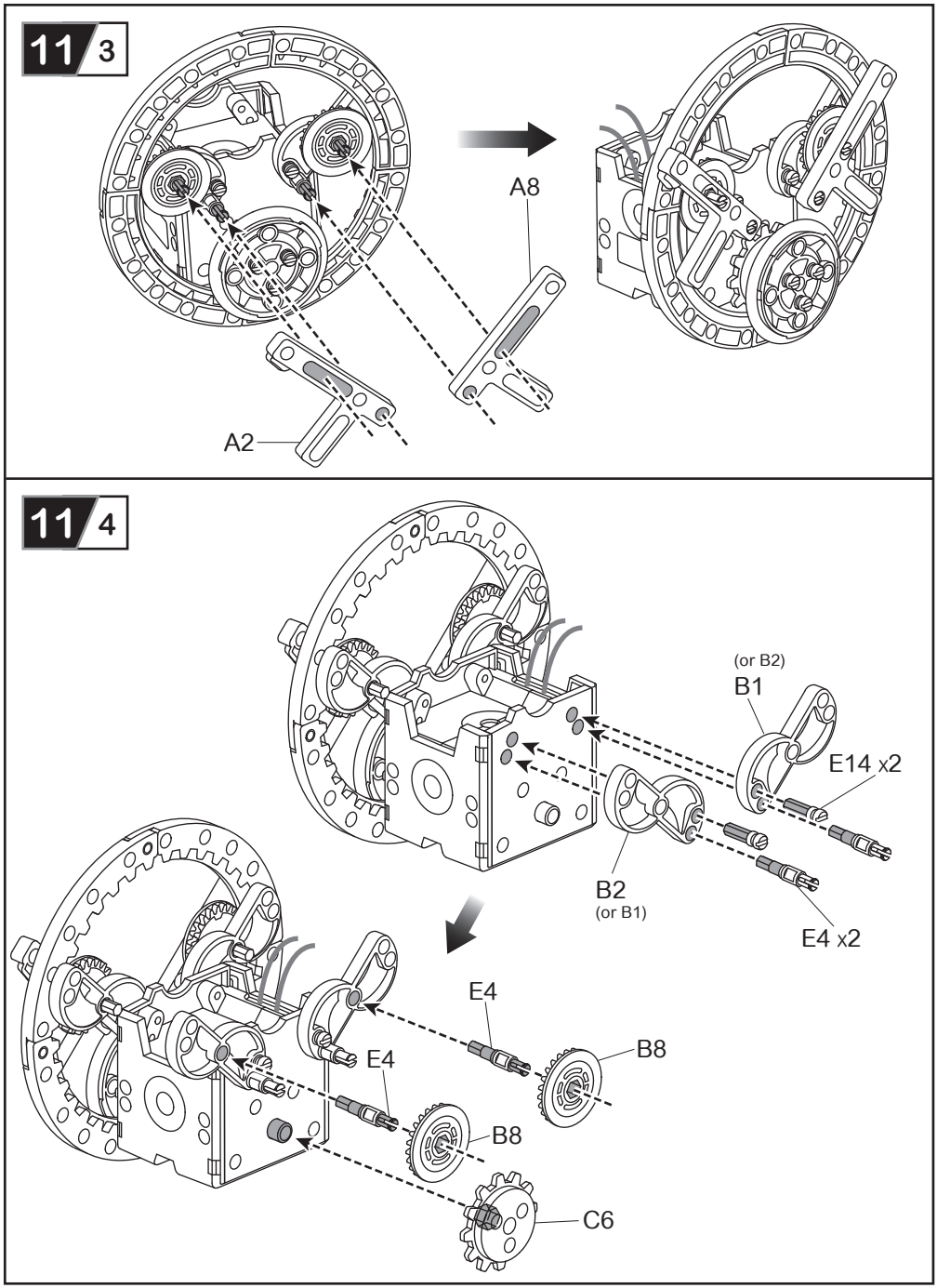
11 3
A8
A2
11 4
(or B2)
B1
E14 x2
B2
(or B1)
E4 x2
E4
B8
E4
B8
C6

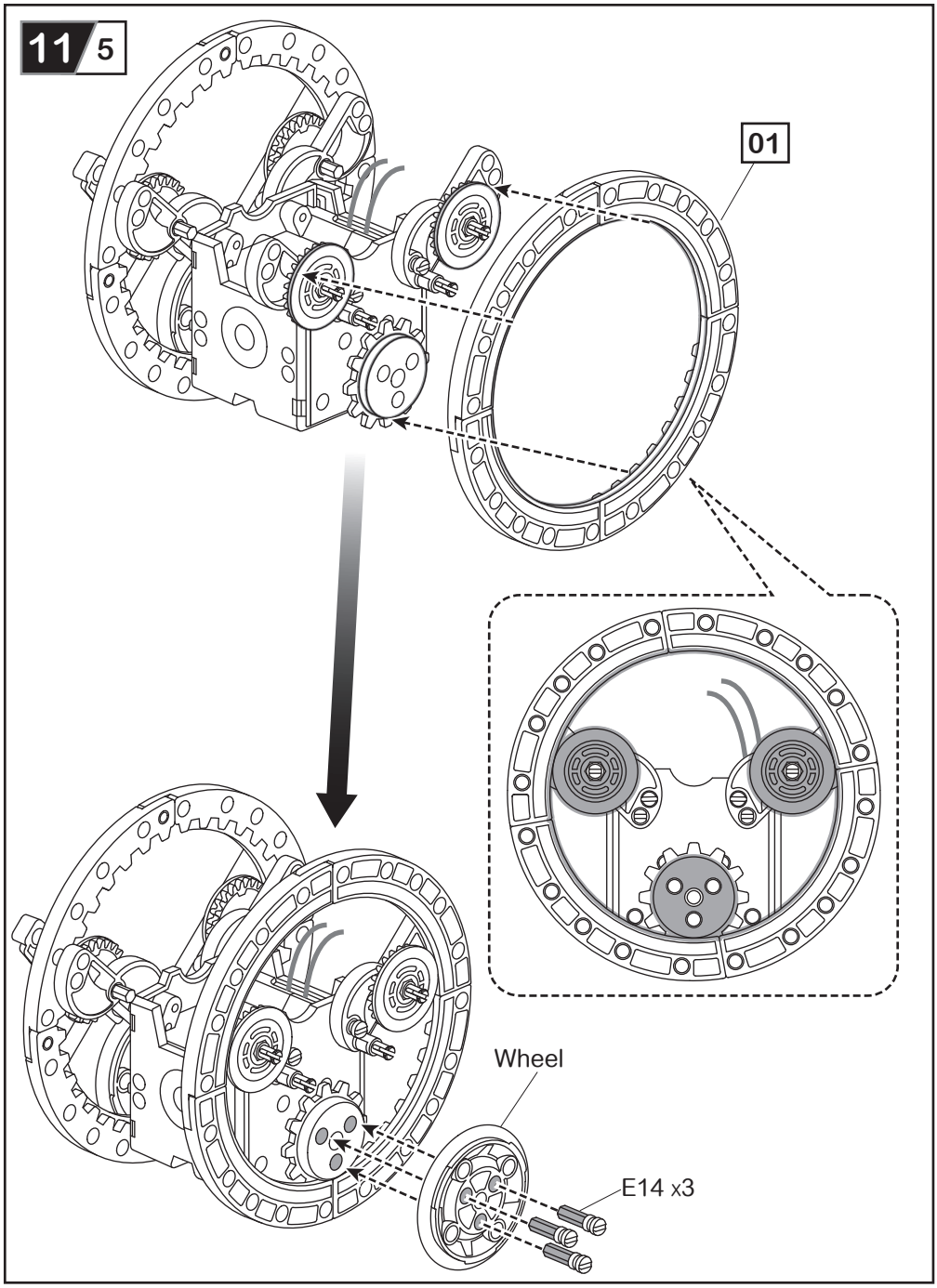
11/5
01
Wheel
E14 x3

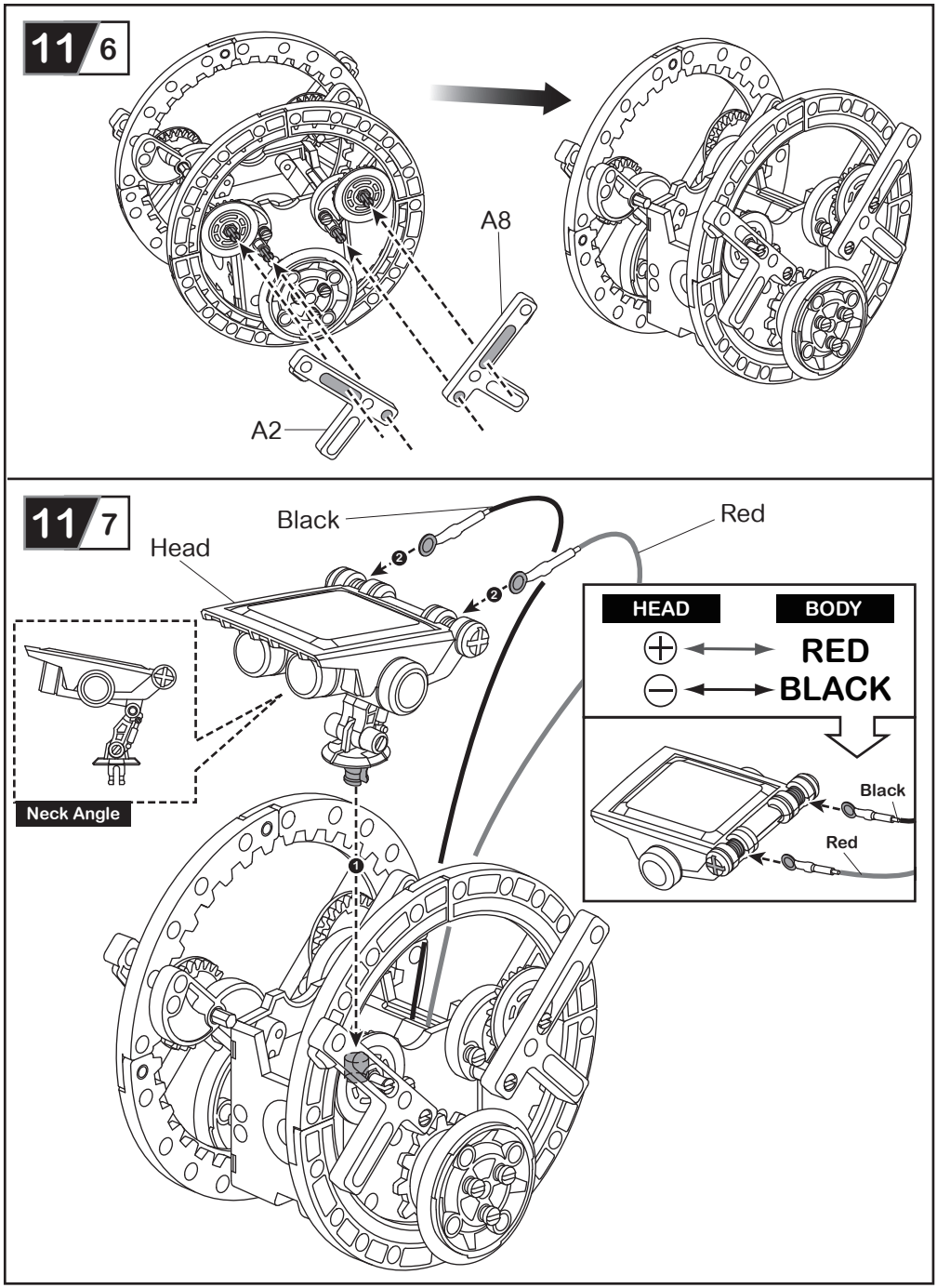
11 6
A8
A2
11 7
Black
Red
Head
HEAD
BODY
RED
BLACK
Black
Red
Neck Angle

12 Boxer-bot Assembly

Level 2

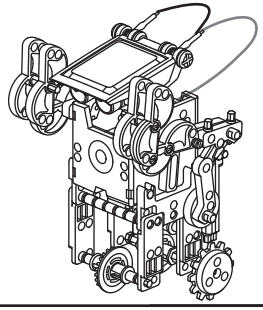

Prepare the below parts first before you assemble the "Boxer-bot".

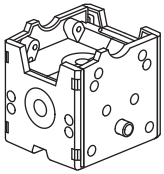

Body

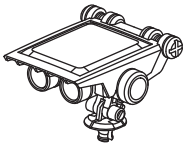

Head

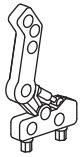

A1 x1

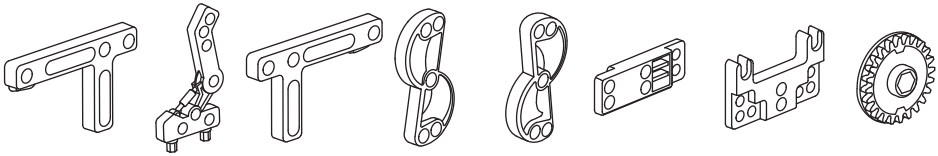

A2 x1 **A7 x1** **A8 x1** **B1 x3** **B2 x3** **B3 x4** **B4 x2** **B8 x4**

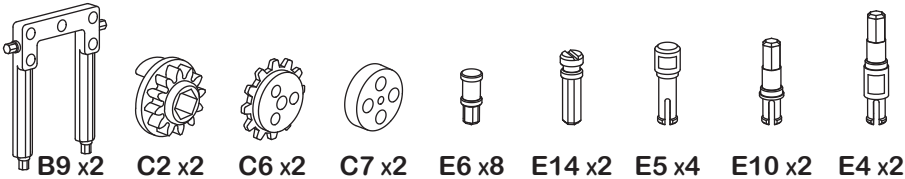

B9 x2 **C2 x2** **C6 x2** **C7 x2** **E6 x8** **E14 x2** **E5 x4** **E10 x2** **E4 x2**

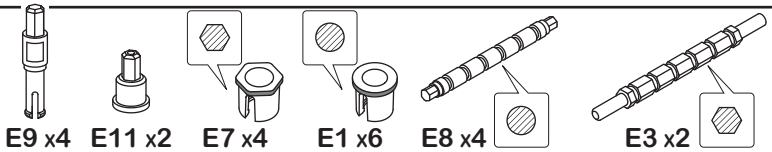

E9 x4 **E11 x2** **E7 x4** **E1 x6** **E8 x4** **E3 x2**

01

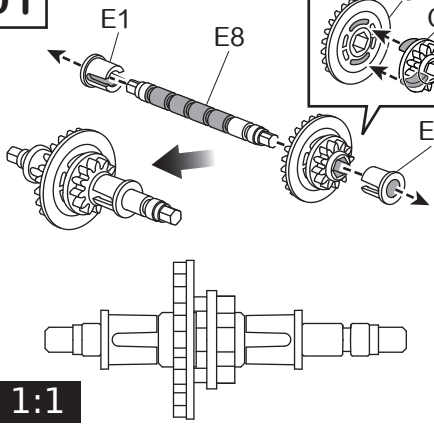

02

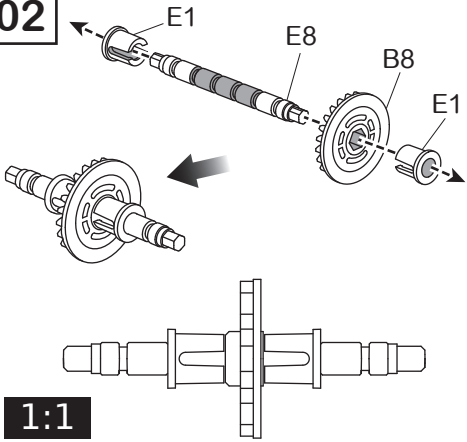

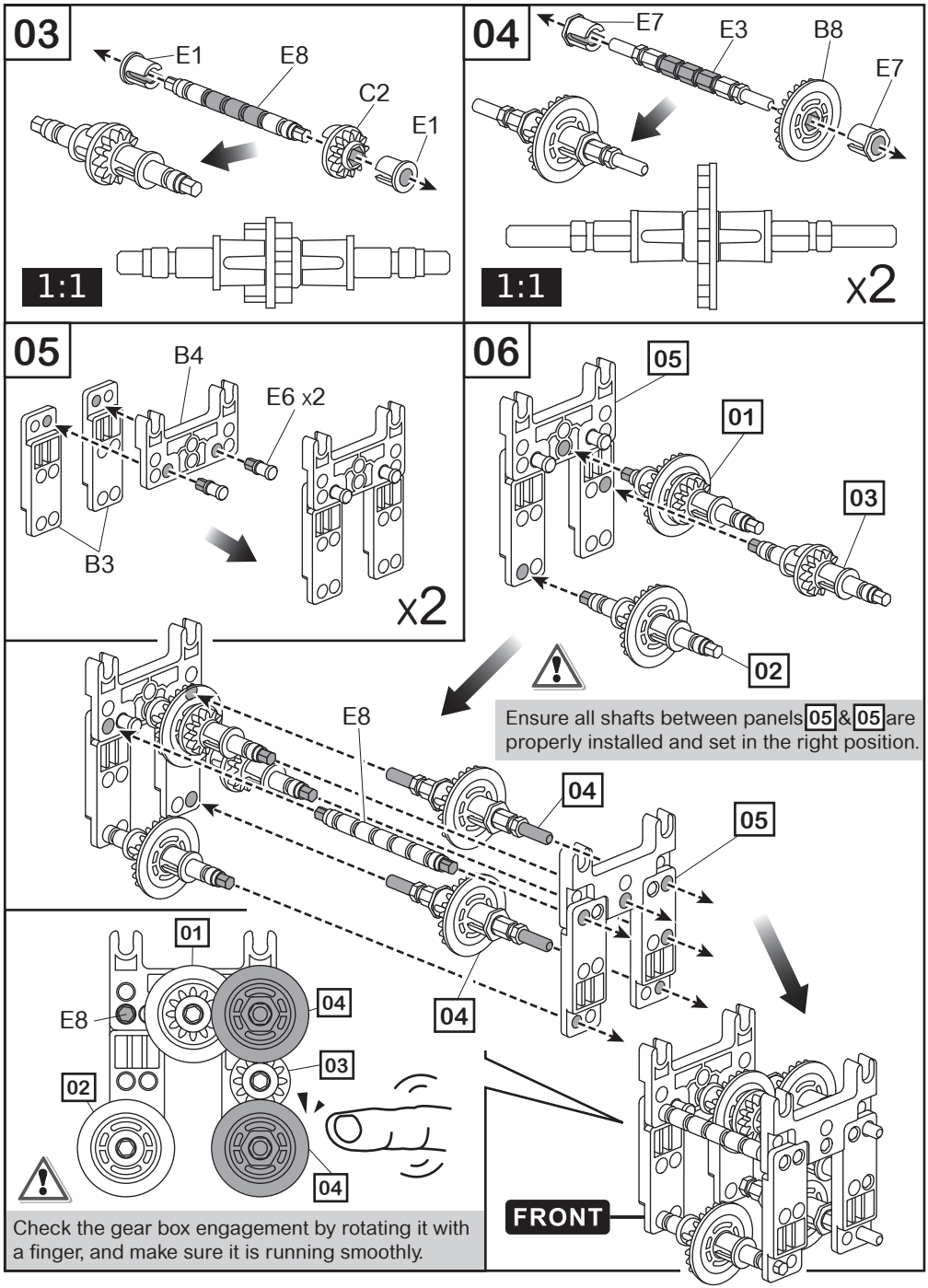

Ensure all shafts between panels 05 & 05 are properly installed and set in the right position.

Check the gear box engagement by rotating it with a finger, and make sure it is running smoothly.

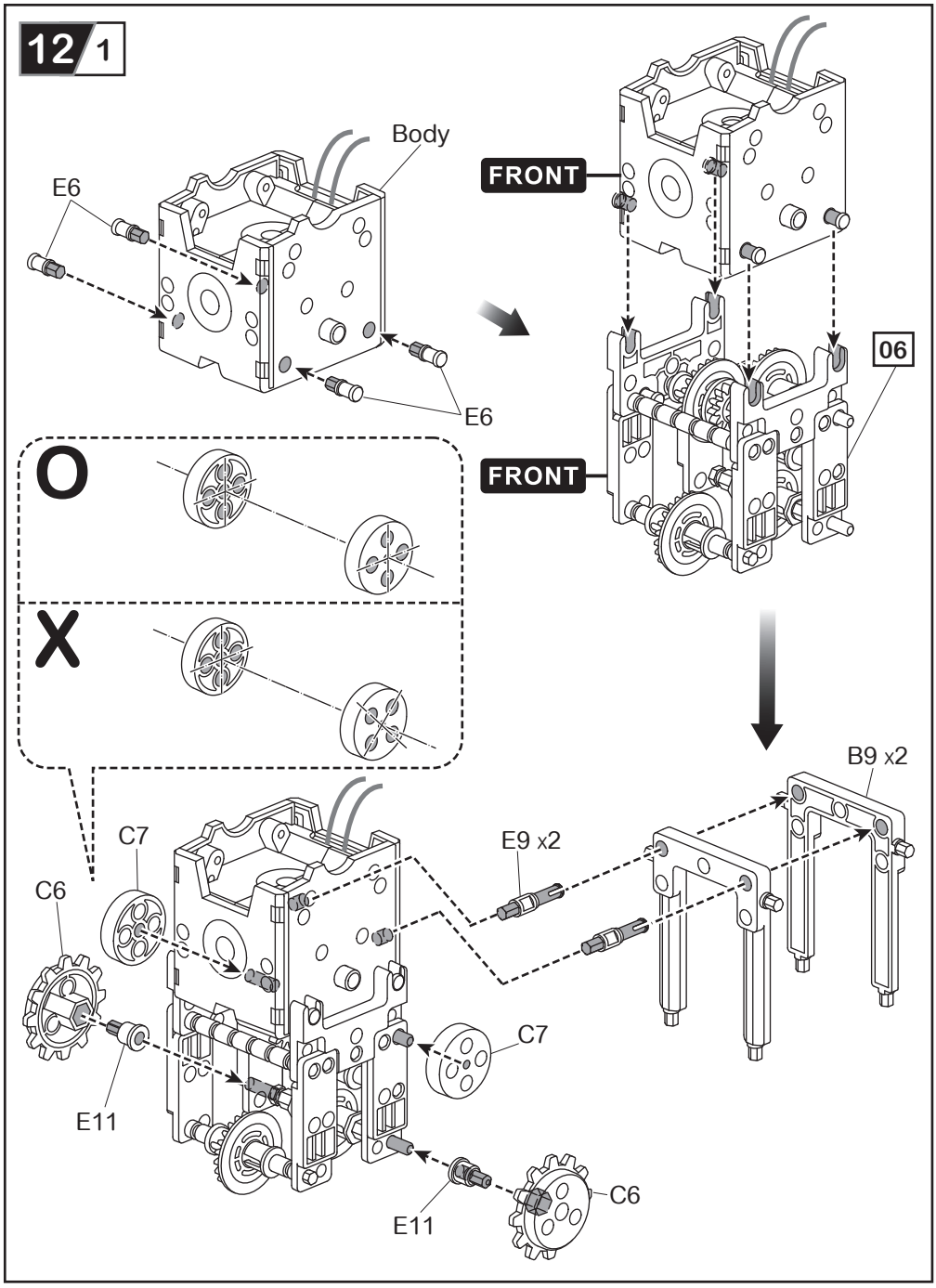
12/1
Body
E6
E6
FRONT
FRONT
06
O
X
B9 x2
C7
E9 x2
C6
C7
E11
E11
C6

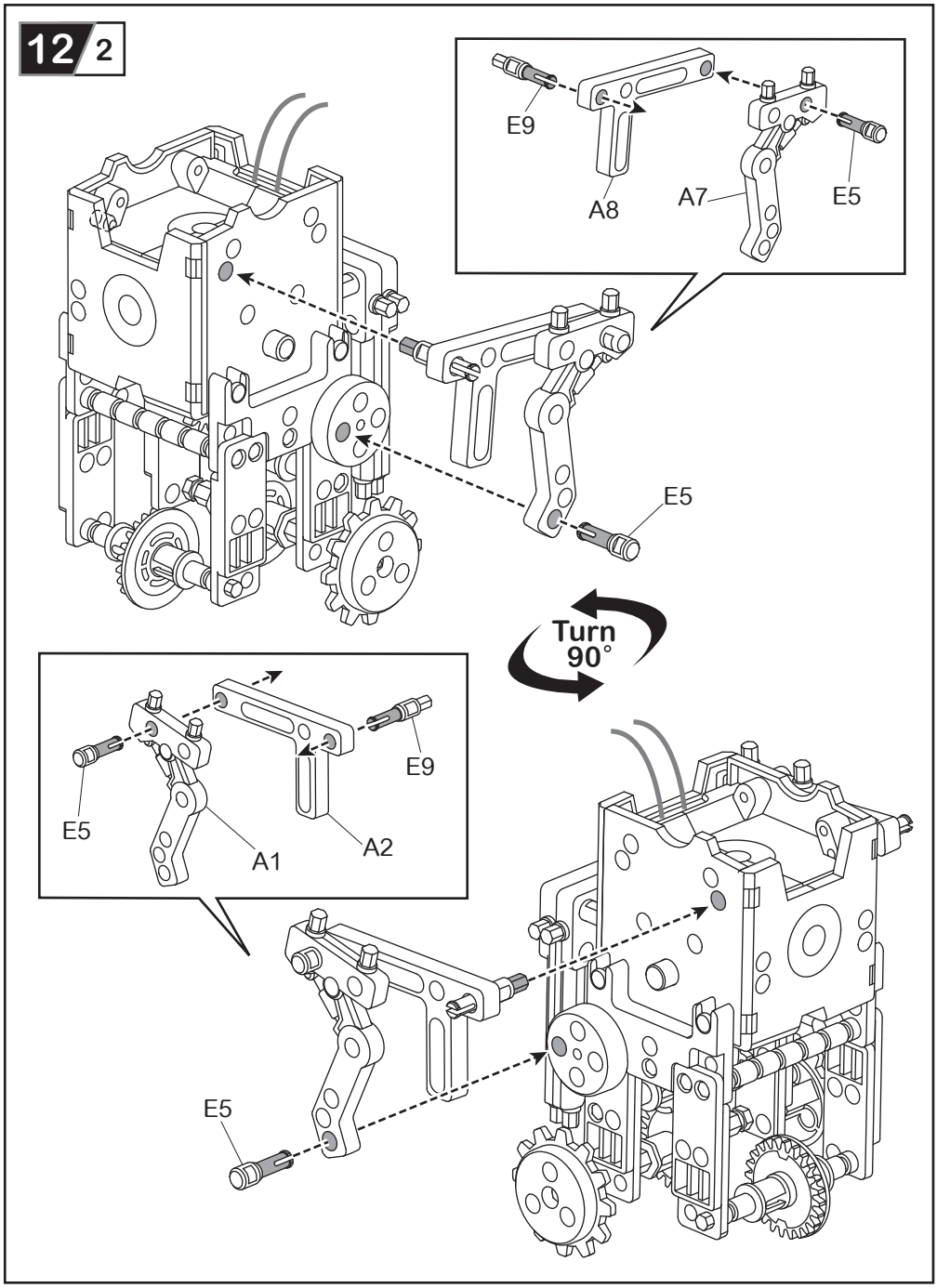
12/2
E9
A8
A7
E5
E5
Turn
90°
E9
E5
A1
A2
E5

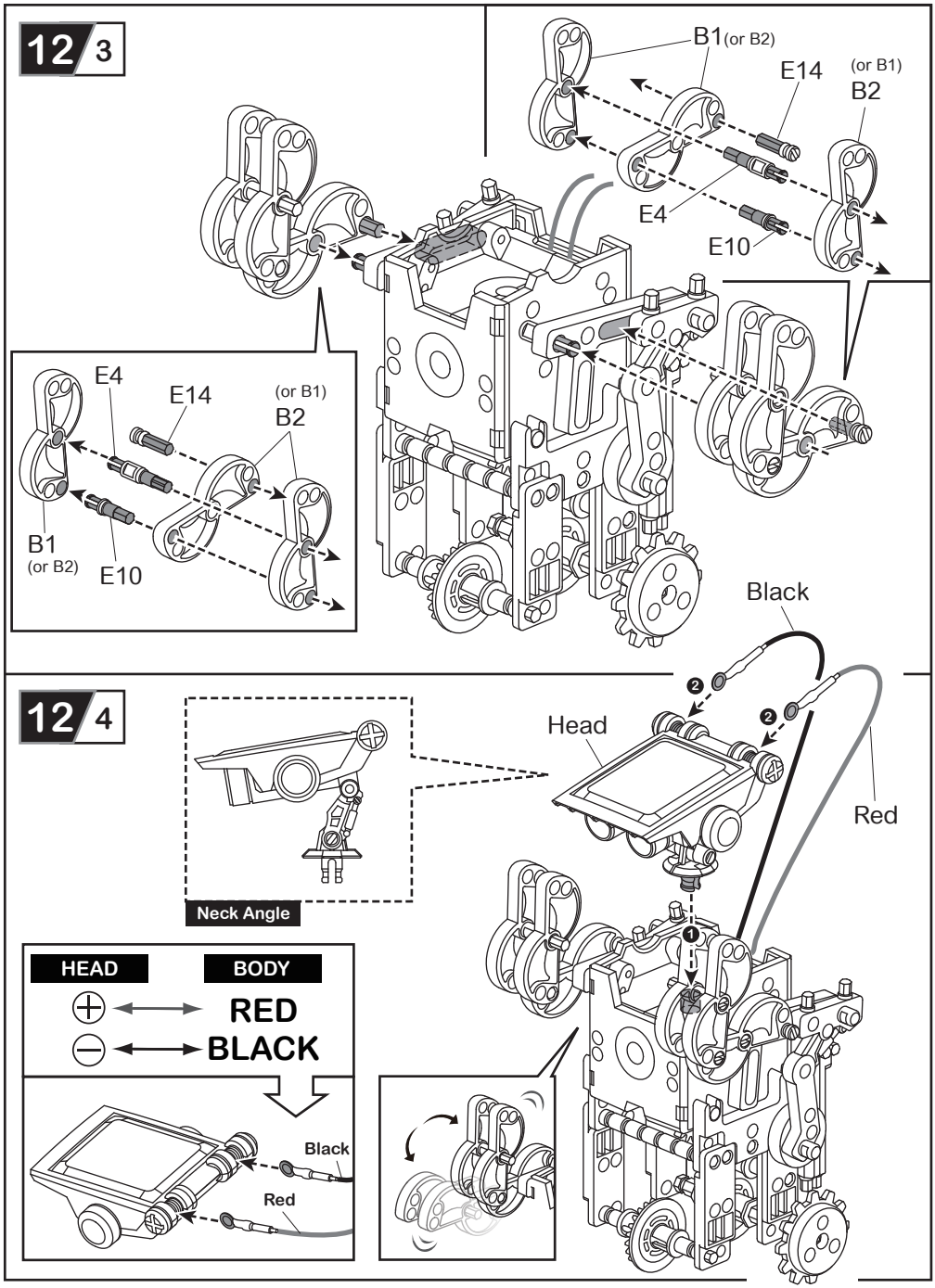
12 3
B1 (or B2)
E14
(or B1)
B2
E4
E10
E4
E14
(or B1)
B2
B1
(or B2)
E10
Black
12 4
Head
Red
Neck Angle
HEAD
BODY
RED
BLACK
Black
Red

13 Surf-bot Assembly

Level 2

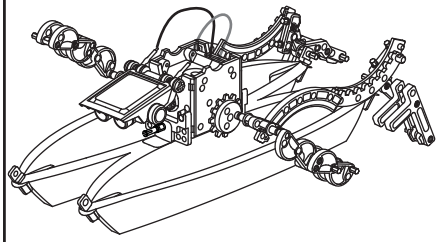

Prepare the below parts first before you assemble the "Surf-bot".

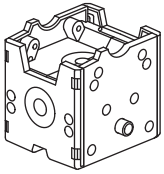

Body

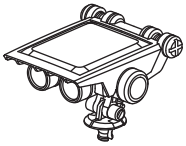

Head

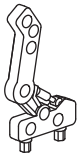

A1 x1

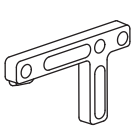

A2 x2

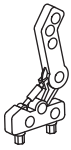

A7 x1

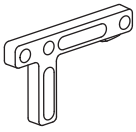

A8 x2

B1 x3

B2 x3

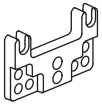

B4 x2

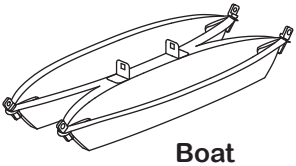

Boat

B5 x2

C1 x4

C6 x2

E6 x4

E5 x6

E10 x4

E4 x10

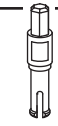

E9 x2

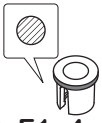

E1 x4

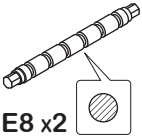

E8 x2

01

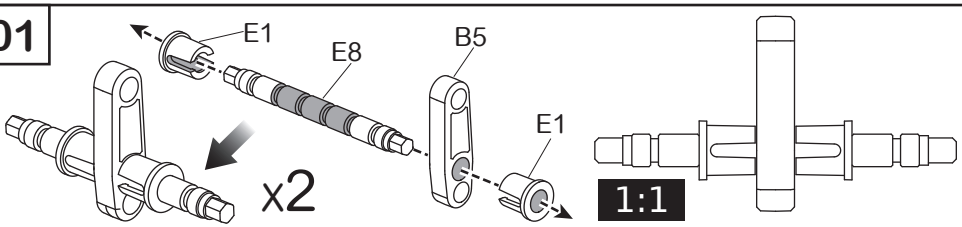

13 1

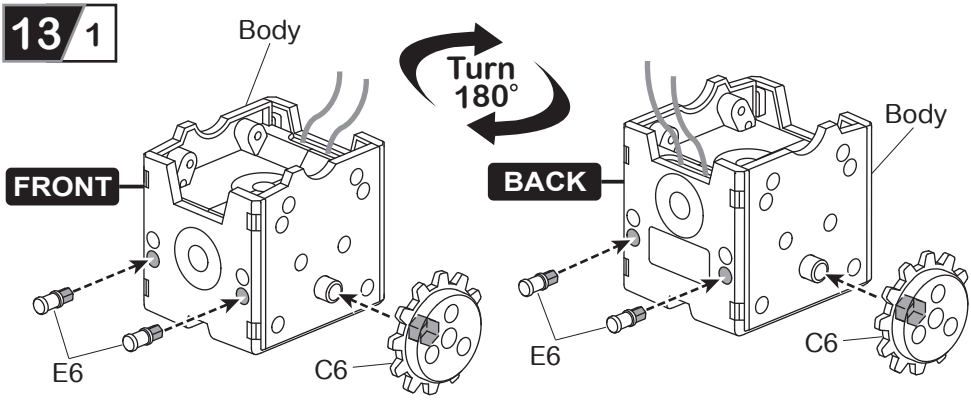

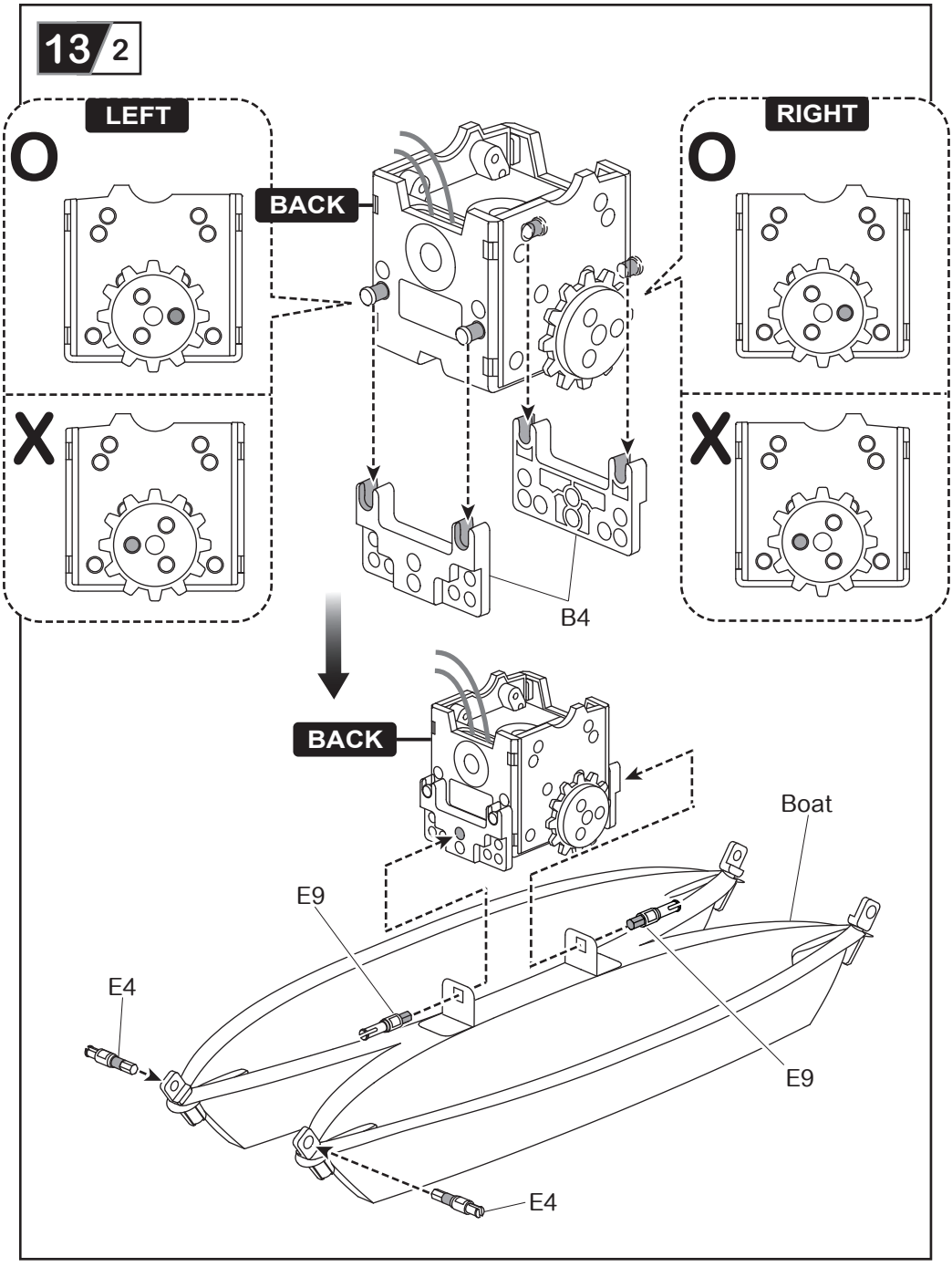
13/2
LEFT
O
X
BACK
RIGHT
O
X
B4
BACK
Boat
E9
E4
E9
E4

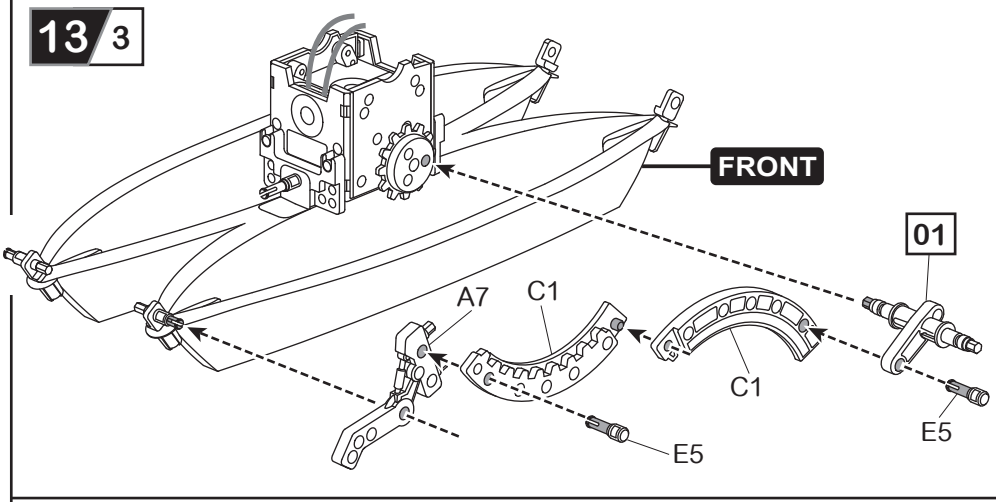
13 3
FRONT
01
A7
C1
C1
E5
E5

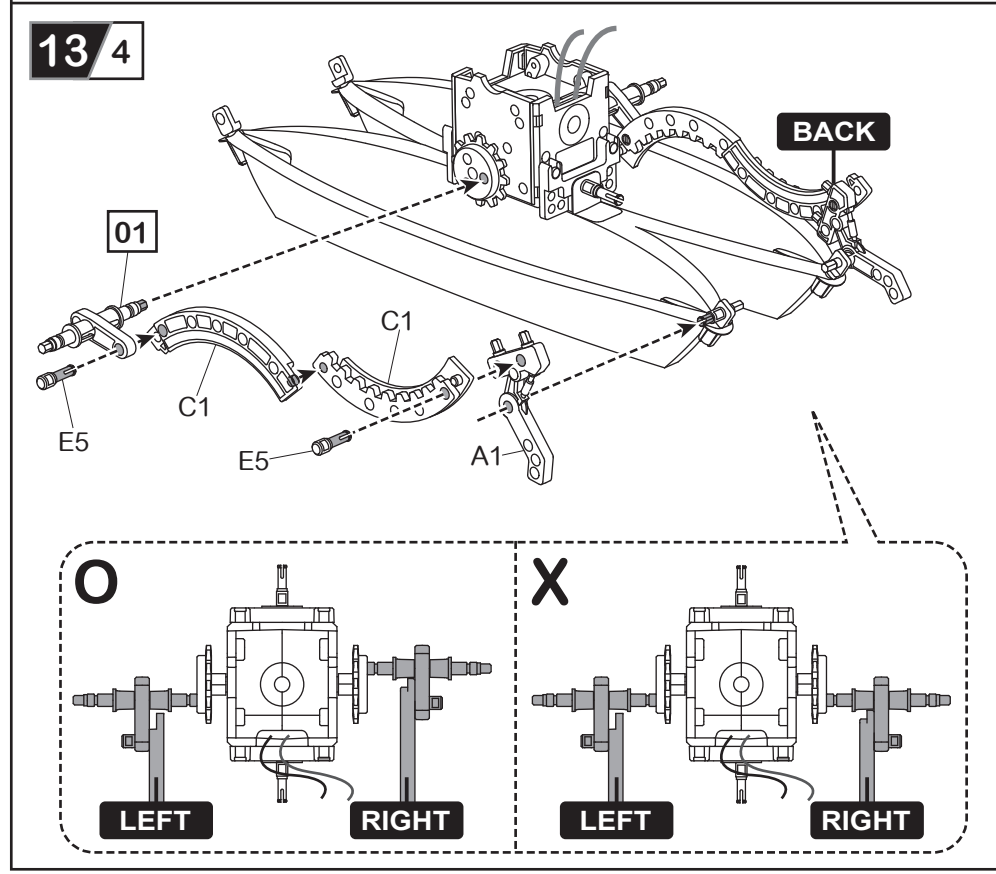
13 4
BACK
01
C1
C1
E5
E5
A1
O
LEFT
RIGHT
X
LEFT
RIGHT

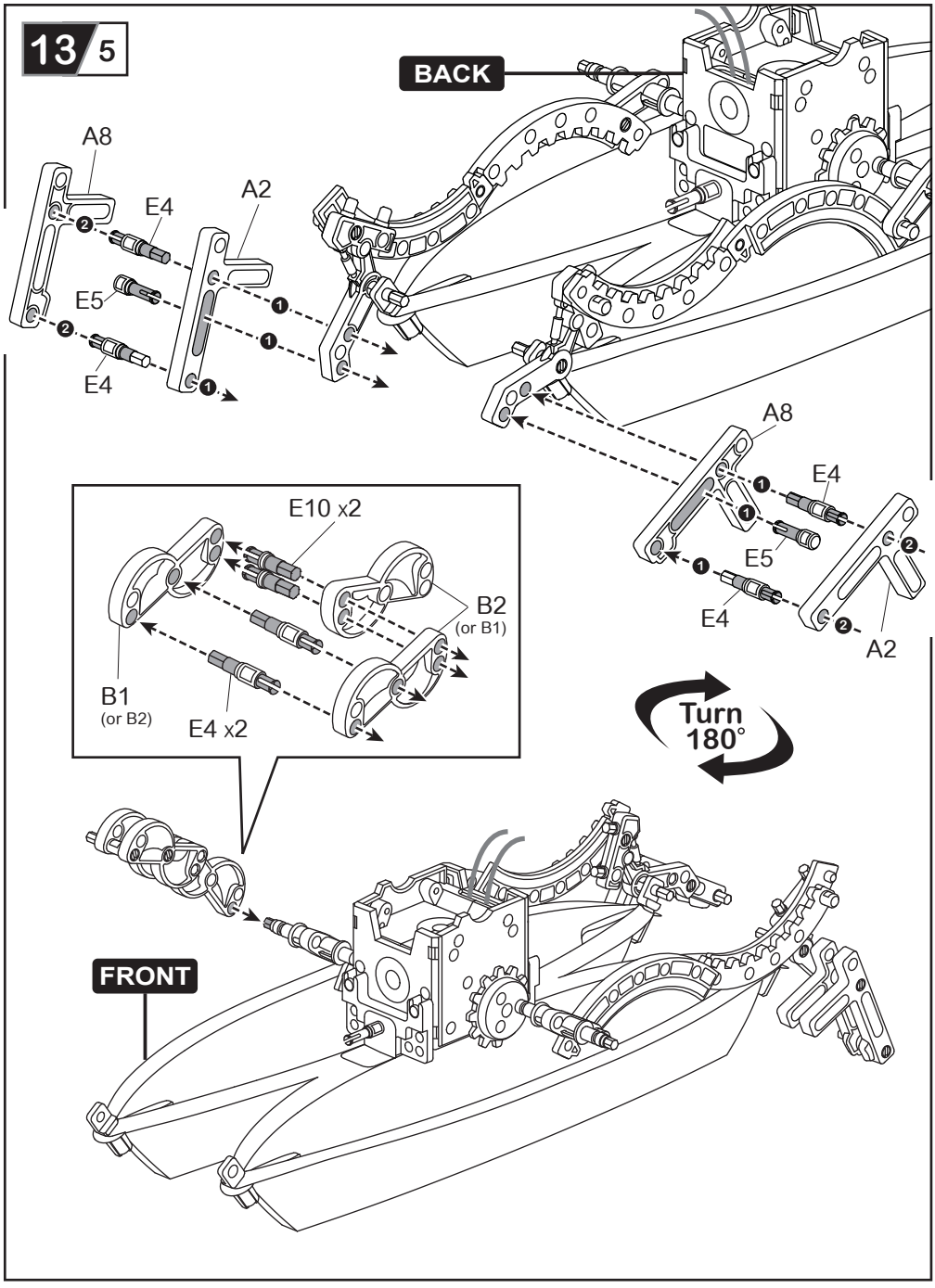
13/5
BACK
A8
E4
A2
E5
E4
A8
E4
E5
E4
A2
E10 x2
B2
(or B1)
B1
(or B2)
E4 x2
Turn
180°
FRONT

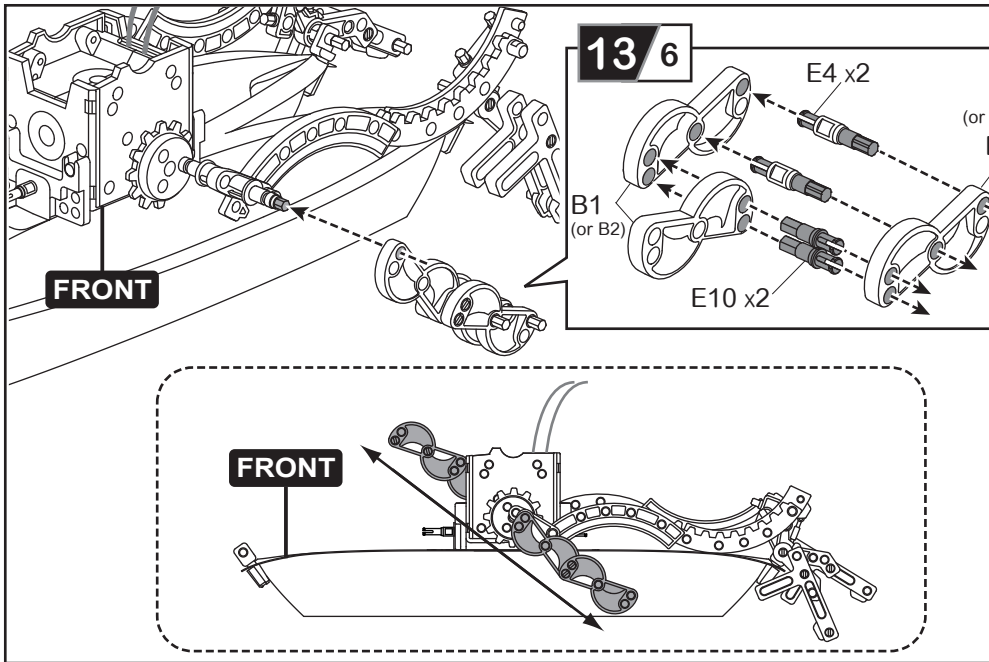
13/6
E4 x2
(or B1)
B2
B1
(or B2)
E10 x2
FRONT
FRONT

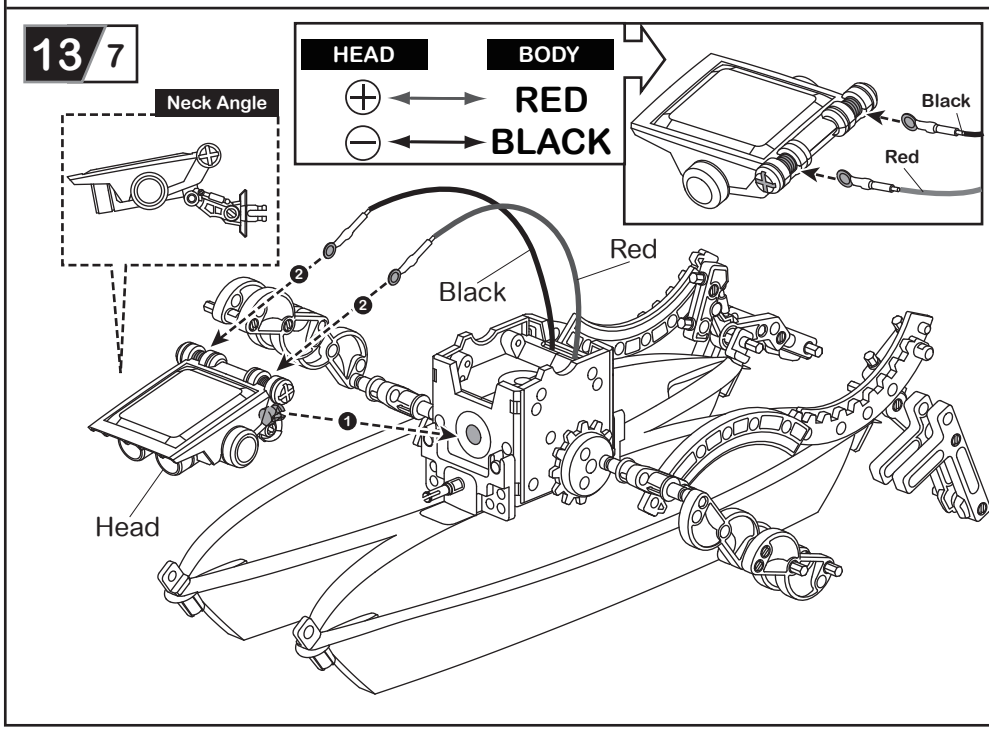
13/7
Neck Angle
HEAD
BODY
RED
BLACK
Black
Red
Red
Black
Head

14 Row-bot Assembly

Level 2

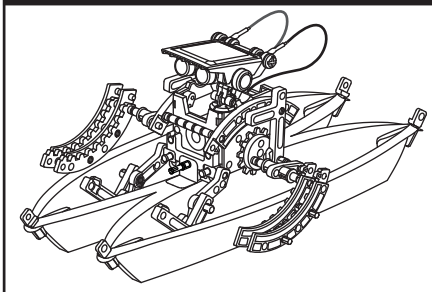

Prepare the below parts first before you assemble the "Row-bot".

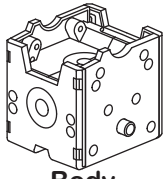

Body

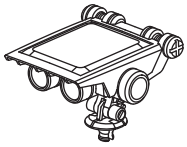

Head

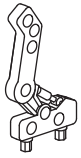

A1 x1

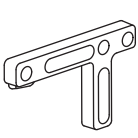

A2 x2

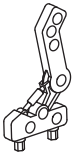

A7 x1

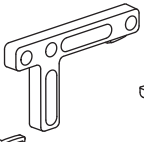

A8 x2

A9 x2

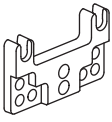

B4 x2

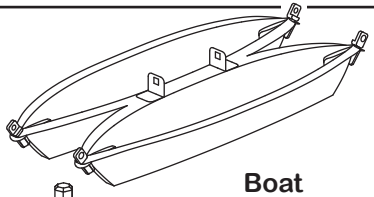

Boat

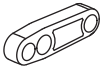

B5 x2

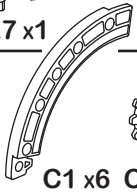

C1 x6

C6 x2

E6 x6

E5 x4

E4 x8

E9 x2

E1 x4

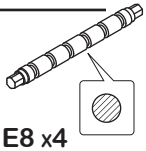

E8 x4

01

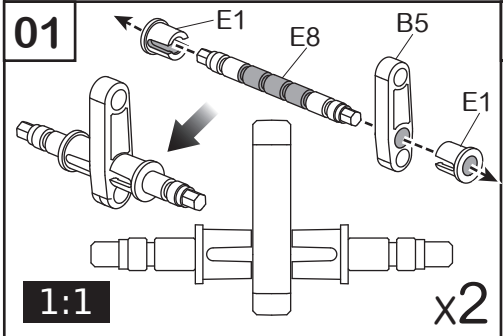

02

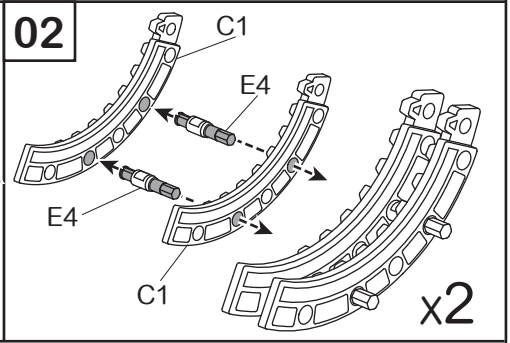

14/1

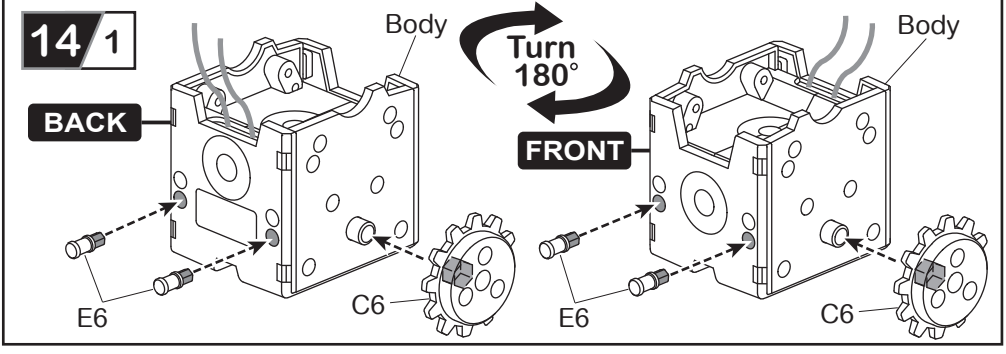

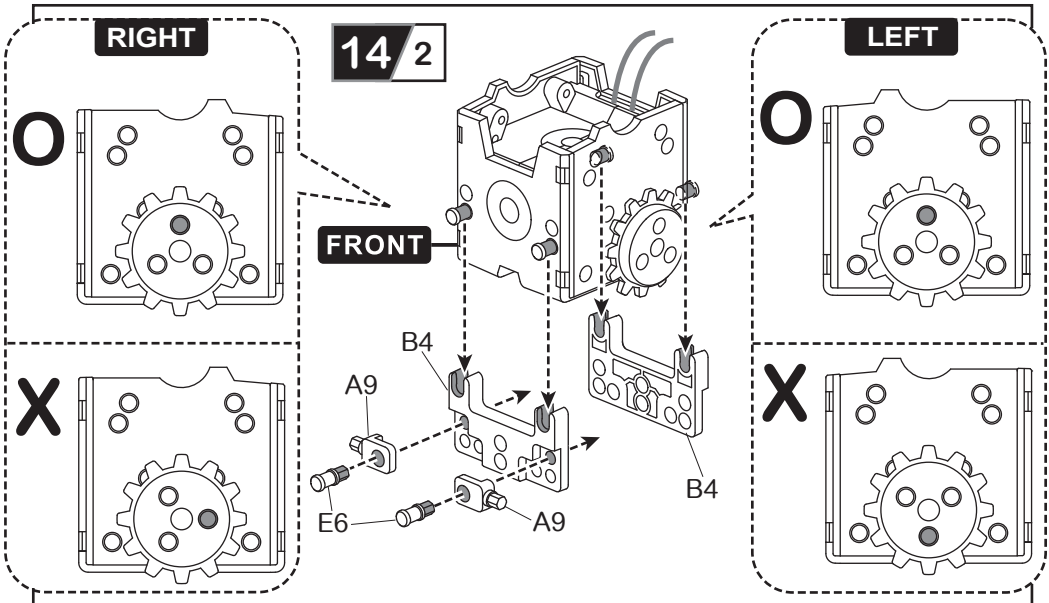
RIGHT
14 2
LEFT
O
O
FRONT
B4
A9
X
X
B4
E6
A9

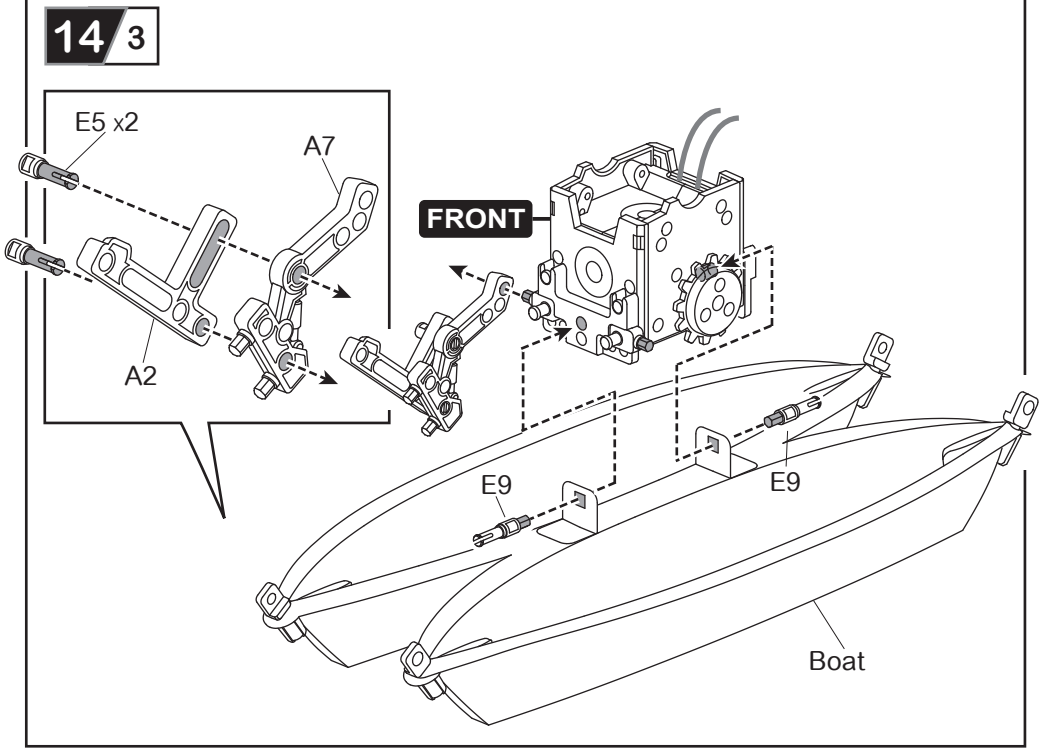
14 3
E5 x2
A7
FRONT
A2
E9
E9
Boat

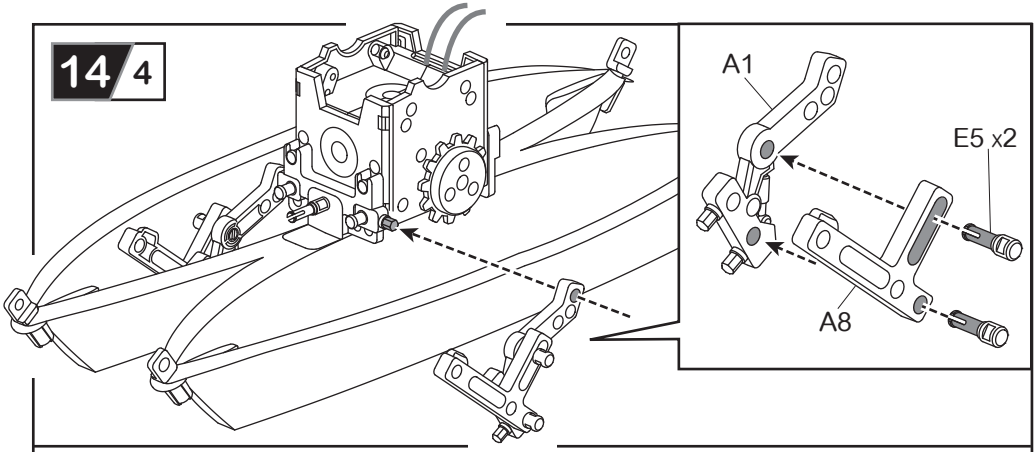
14 4
A1
E5 x2
A8

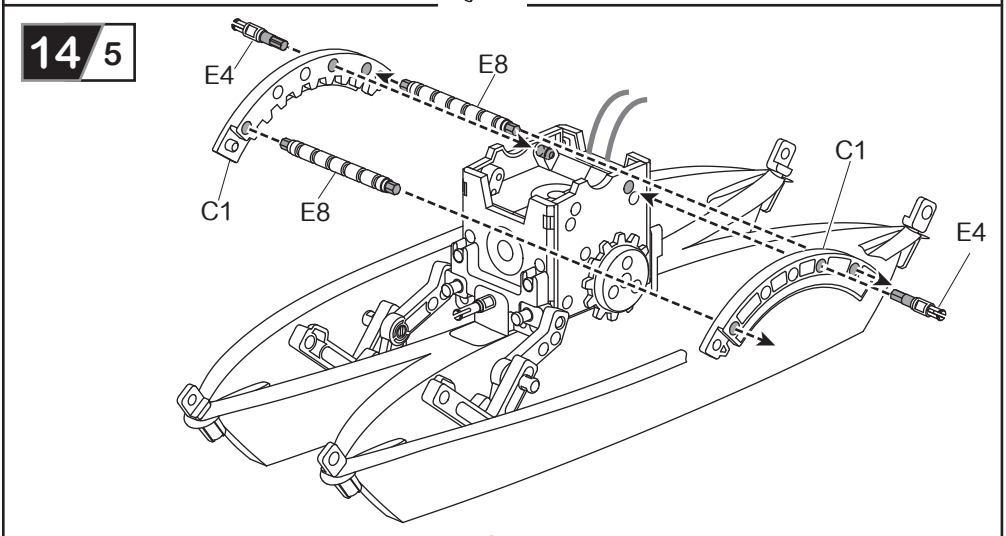
14 5
E4
E8
C1
E8
C1
E4

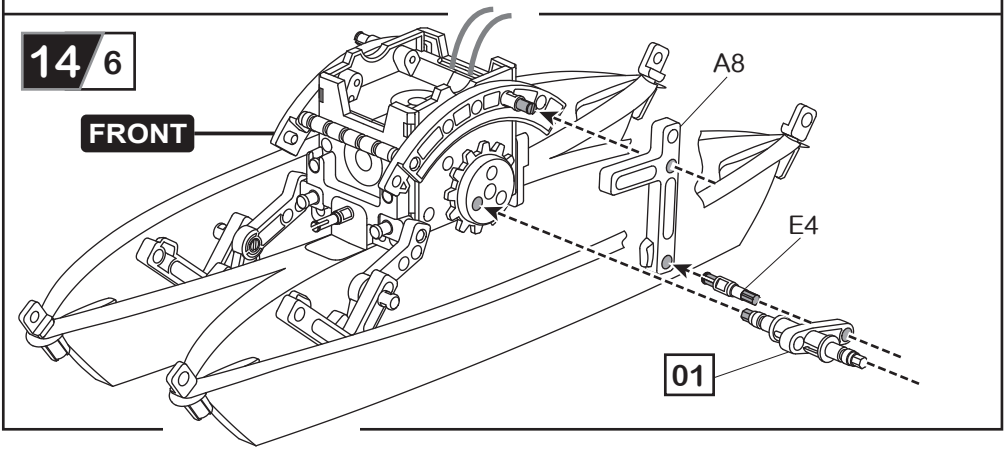
14 6
FRONT
A8
E4
01

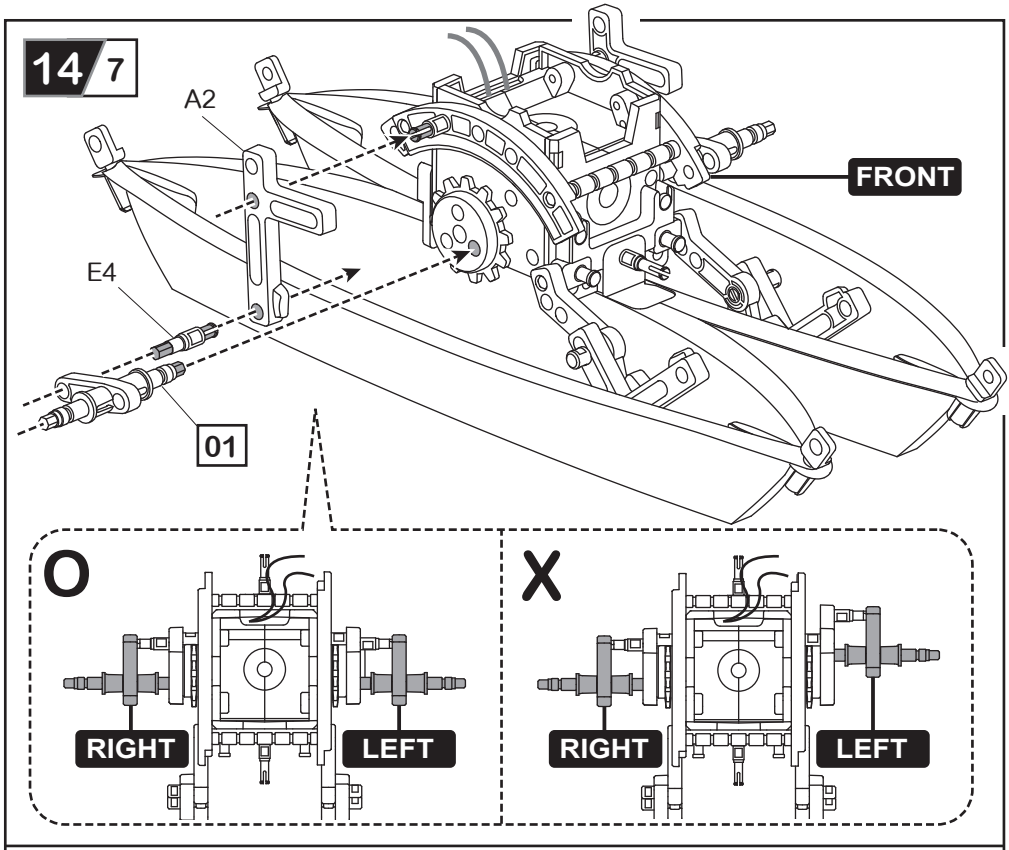
14 7
A2
FRONT
E4
01
O
RIGHT
LEFT
X
RIGHT
LEFT

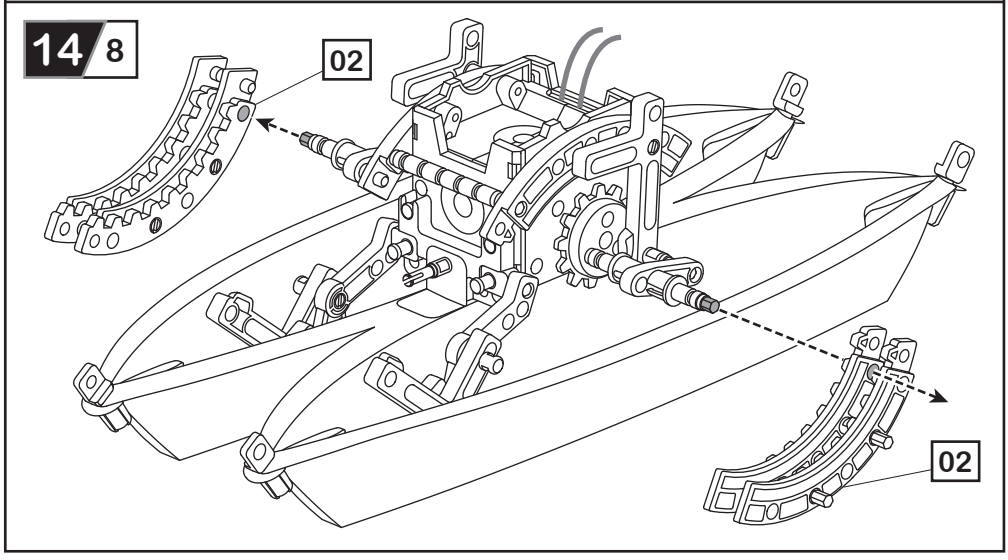
14 8
02
02

14/9

HEAD	BODY
⊖	RED
⊕	BLACK

Red
Black
Head
Neck Angle

It's time to have some FUN !

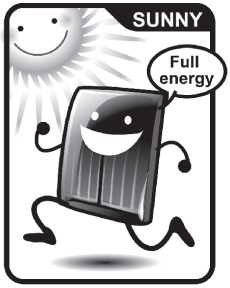

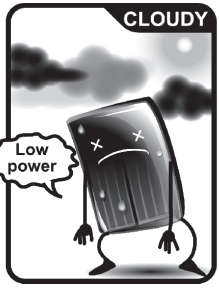

1. Take outside under direct sunlight. Best results are obtained when operated on a sunny day.
2. For indoor fun, use a 50 watt halogen light. The product will not run on a cloudy day, shaded locations, indirect sunlight, or under a Fluorescent light.

- 14 solar robots
- Educational
- Robotistic
- Mechanical
- Scientific & Fun

WARNING :
CHOKING HAZARD
Small parts
Not for children under 3 years

14 in 1 EDUCATIONAL SOLAR ROBOT KIT

4350006151